KAWNEER 1600 WALL CURTAINWALL SYSTEM
SYSTEM 1 (CAPTURED) and SYSTEM 2 (SSG)
LARGE AND SMALL MISSILE IMPACT RESISTANT

Digitally signed by Scott Wolters
Date: 2026.08.19 00:23:37 -04'00'

GENERAL NOTES:

1. THIS PRODUCT MEETS ALL THE REQUIREMENTS OF THE 9TH EDITION (2026) FLORIDA BUILDING CODE, INCLUDING THE HVHZ PROVISIONS.
2. THIS SYSTEM HAS BEEN TESTED PER TAS 201, 202, AND 203 FOR LARGE AND SMALL MISSILE IMPACT RESISTANCE. SHUTTERS ARE NOT REQUIRED.
3. DESIGN LOADS MUST BE CALCULATED BY A PROFESSIONAL ENGINEER OR ARCHITECT FOR EACH PROJECT. THE (ASD) DESIGN PRESSURE CANNOT EXCEED THE PRESSURES LISTED FOR EACH COMPONENT OF THIS SYSTEM.
4. WOOD BUCKS ARE BY OTHERS AND MUST BE ANCHORED PROPERLY TO TRANSFER IMPOSED LOADS TO THE STRUCTURE.
5. ANCHORS SHALL BE AS LISTED AND SPACED AS SHOWN ON DETAILS. ANCHOR EMBEDMENT IN BASE MATERIAL SHALL BE BEYOND WALL DRESSING OR STUCCO.
6. CODE REQUIREMENTS FOR SAFE GUARDS MUST BE OBSERVED.
7. THE GLASS CHARTS IN SECTION 5 ARE BASED ON TESTED PRESSURES AND ASTM E1300–16, AND ALSO LIMITED BY THE ALLOWABLE STRESS OF THE STRUCTURAL SILICONE FOR SSG MULLIONS.
8. MATERIALS, INCLUDING BUT NOT LIMITED TO STEEL/METAL SCREWS, THAT COME INTO CONTACT WITH DISSIMILAR MATERIALS SHALL BE SEPARATED TO PREVENT GALVANIC REACTIONS PER FBC REQUIREMENTS
9. THE INSTALLATION DETAILS SHOWN IN THIS APPROVAL ARE GENERIC. SITE SPECIFIC DETAILS THAT VARY FROM THE CONDITIONS SHOWN MUST BE APPROVED BY A FLORIDA LICENSED ENGINEER OR ARCHITECT AND THE LOCAL BUILDING OFFICIAL.

SYSTEM NOTES:

GLASS.....	SEE CHARTS IN SECTION 05 FOR ALLOWABLE GLASS TYPES, SIZES AND DESIGN PRESSURES.
MULLIONS.....	SEE CHARTS IN SECTION 04 FOR ALLOWABLE DESIGN PRESSURES FOR VARIOUS MULLION AND REINFORCEMENT CONFIGURATIONS.
JAMBS.....	SEE CHARTS IN SECTION 04 (FREE JAMBS) AND SECTION 06 (FASTENED JAMB) FOR ALLOWABLE DESIGN PRESSURES.
HORIZONTALS.....	SEE CHARTS IN SECTION 04 FOR ALLOWABLE HORIZONTAL MULLIONS AND DESIGN PRESSURES.
ANCHORS.....	SEE CHARTS IN SECTION 06 FOR ALLOWABLE LOADS FOR HEAD/SILL ANCHORS AND MID–SPAN ANCHORS.
SYSTEM.....	THE DESIGN PRESSURE OF THE ENTIRE SYSTEM IS THE LOWEST ALLOWABLE DESIGN PRESSURE OF THE COMPONENTS ABOVE.
DOORS.....	DOORS AND THEIR SUB–FRAMES ARE NOT A PART OF THIS APPROVAL. PLEASE SEE SEPARATE APPROVAL FOR DOOR RATING, GLAZING, ANCHORS, HARDWARE, AND DETAILS.

TABLE OF CONTENTS

SHEET	DESCRIPTION
01	SECTION 1 – GENERAL NOTES / SECTION NOTES
02	SECTION 2 – MULTI SPAN ELEVATION / WALL SECTION
03	SINGLE SPAN ELEVATION / WALL SECTION
04	SECTION 3 – HEAD DETAILS
05	HORIZONTAL DETAILS
06	HORIZONTAL DETAILS
07	SILL DETAILS
08	JAMB DETAILS
09	MULLION DETAILS
10	CAPTURED CORNER DETAILS
11	SSG CORNER DETAILS
12	MULLION SPLICE DETAILS
13	DOOR DETAILS
14	SECTION 4 – MULLION LOAD TABLES (SINGLE SPAN)–CAPTURED MULLIONS
15	MULLION LOAD TABLES (SINGLE SPAN)–JAMBS & SSG MULLIONS
16	MULLION LOAD TABLES (MULTI–SPAN)–WALL SECTION 1
17	MULLION LOAD TABLES (MULTI–SPAN)–WALL SECTION 2
18	MULLION LOAD TABLES (MULTI–SPAN)–WALL SECTION 3
19	CORNER MULLION LOAD TABLES
20	MULLION LOAD TABLE (MULTI–SPAN)–UNEQUAL SPANS
21	HORIZONTAL MULLION LOAD TABLES
22	SECTION 5 – LARGE/SMALL MISSILE GLAZING DETAILS–GLASS TYPE 1–4
23	LARGE/SMALL MISSILE GLAZING DETAILS–GLASS TYPE 5–8
24	LARGE/SMALL MISSILE GLAZING DETAILS–CAPTURED VERTICALS
25	LARGE/SMALL MISSILE GLAZING DETAILS–SSG VERTICALS
26	SMALL MISSILE ONLY GLAZING DETAILS–CAPTURED VERTICALS
27	SMALL MISSILE ONLY GLAZING DETAILS–SSG VERTICALS
28	SECTION 6 – HEAD AND SILL ANCHOR DETAILS
29	HEAD AND SILL ANCHOR DETAILS
30	HEAD AND SILL ANCHOR DETAILS
31	HEAD AND SILL ANCHOR CHARTS (SINGLE SPAN)
32	HEAD AND SILL ANCHOR CHARTS (MULTI–SPAN)
33	MID–SPAN ANCHOR DETAILS – STEEL SUBSTRATE
34	MID–SPAN ANCHOR DETAILS – STEEL SUBSTRATE
35	MID–SPAN ANCHOR DETAILS – STEEL SUBSTRATE
36	MID–SPAN ANCHOR DETAILS – CONCRETE SUBSTRATE
37	MID–SPAN ANCHOR CHARTS
38	FASTENED JAMB DETAILS/CHARTS AND DOORJAMB ANCHORS
39	SECTION 7 – BILL OF MATERIALS AND GLAZING MATERIALS
40	EXTRUSION PROFILES
41	EXTRUSION PROFILES
42	EXTRUSION PROFILES

REV.#	DATE	
–	8/17/26	2026 CODE UPDATE
–	12/16/24	REVISION
–	2/19/24	REVISION
–	10/15/23	2023 CODE UPDATE
–	10/12/20	1ST SUBMITTAL
–		PRINTS ISSUED FOR

KAWNEER
AN ARCONIC COMPANY
555 GUTHRIDGE COURT
NORCROSS, GA 30092
PH: (770) 449–5555
WWW.KAWNEER.COM

SEAL:

SCOTT WOLTERS
FL PE# 62354

WOLTERS ENGINEERING
(COA# 27194)
15211 97TH ROAD N
WEST PALM BEACH, FL 33412
(561) 225–1982

PRODUCT: 1600 WALL SYSTEM 1 & 2

DWG: 1600–IR–HVHZ

SECTION: 1

SHEET: 1/42

MULTI-SPAN ELEVATIONS

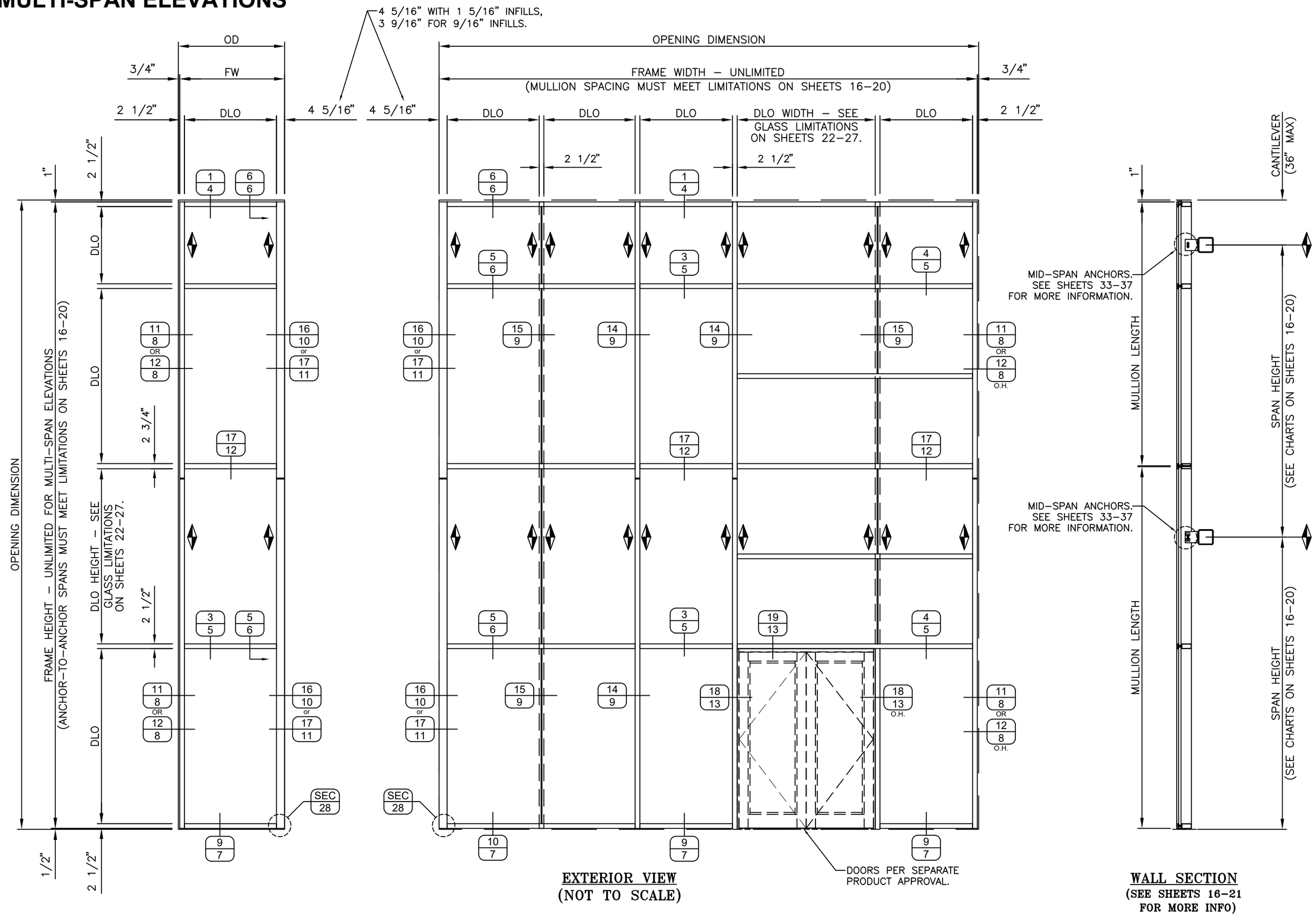

EXTERIOR VIEW
(NOT TO SCALE)

WALL SECTION
(SEE SHEETS 16–21
FOR MORE INFO)

REV.#	DATE	REVISION
–	12/16/24	2023 CODE UPDATE
–	10/15/23	1ST SUBMITTAL
–	10/12/20	PRINTS ISSUED FOR

KAWNEER
AN ARCONIC COMPANY
555 GUTHRIDGE COURT
NORCROSS, GA 30092
PH: (770) 449–5555
WWW.KAWNEER.COM

SEAL:

SCOTT WOLTERS
FL PE# 62354

WOLTERS ENGINEERING
(COA# 27194)
15211 97TH ROAD N
WEST PALM BEACH, FL 33412
(561) 225–1982

PRODUCT:
1600 WALL
SYSTEM 1 & 2

DWG:
1600–IR–HVHZ

SECTION:
2

SHEET:
2/42

SINGLE SPAN ELEVATIONS

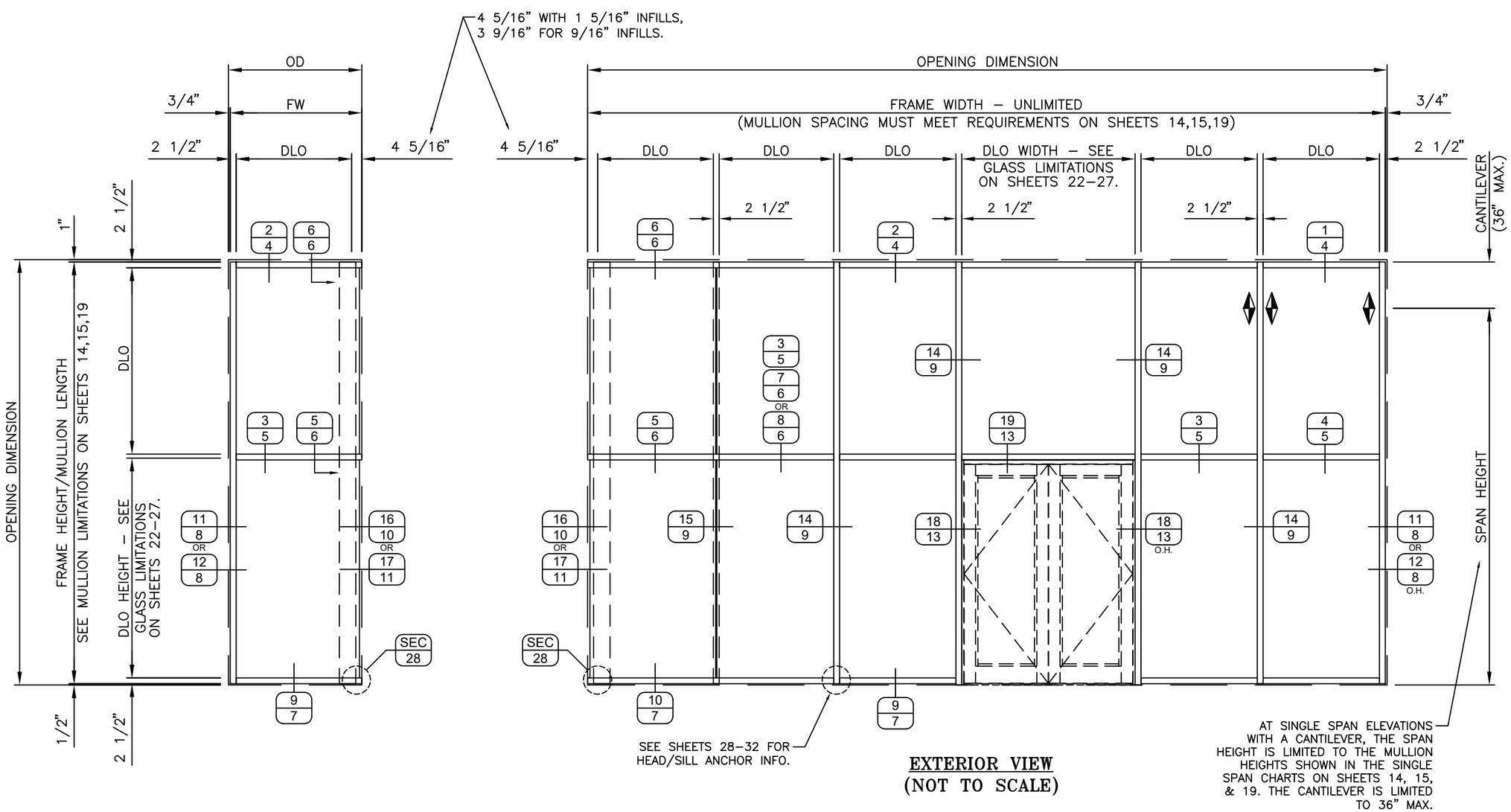

EXTERIOR VIEW
(NOT TO SCALE)

REV.#	DATE	REVISION
–	12/16/24	REVISION
–	10/15/23	2023 CODE UPDATE
–	10/12/20	1ST SUBMITTAL
–	–	PRINTS ISSUED FOR

KAWNEER
AN ARCONIC COMPANY
555 GUTHRIDGE COURT
NORCROSS, GA 30092
PH: (770) 449–5555
WWW.KAWNEER.COM

SEAL:

SCOTT WOLTERS
FL PE# 62354

WOLTERS ENGINEERING
(COA# 27194)
15211 97TH ROAD N
WEST PALM BEACH, FL 33412
(561) 225–1982

PRODUCT:
1600 WALL SYSTEM 1 & 2

DWG:
1600–IR–HVHZ

SECTION:
2

SHEET:
3/42

HEAD DETAILS

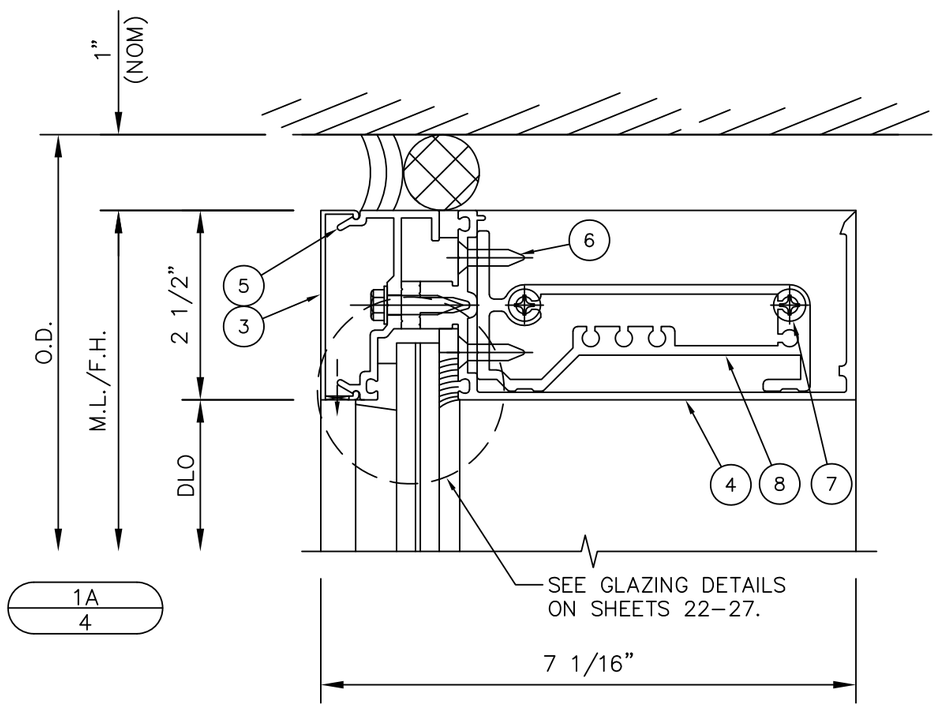

1A
4

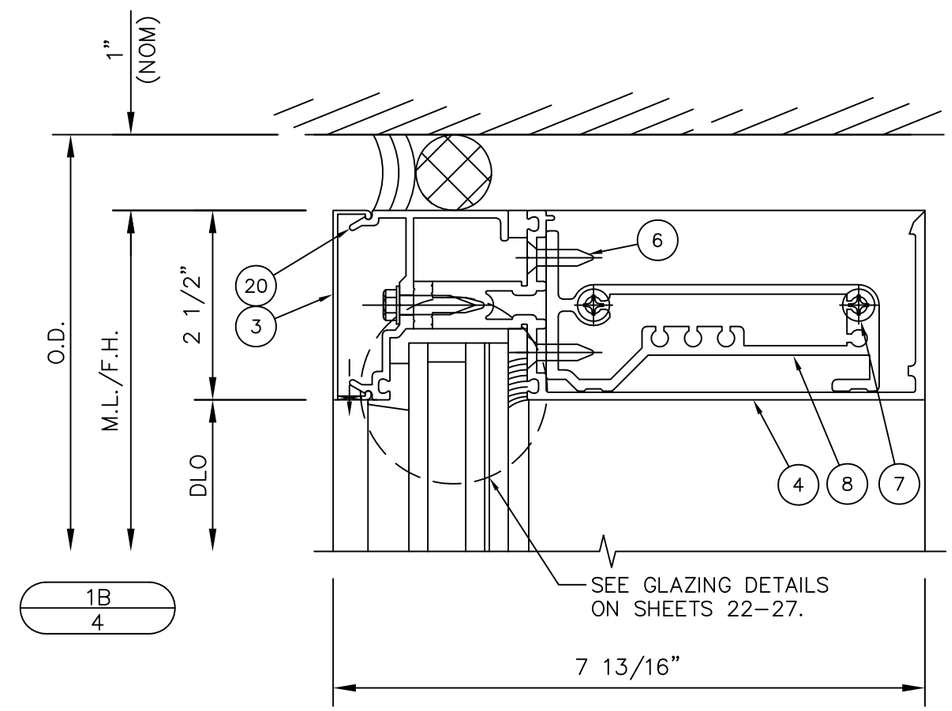

1B
4

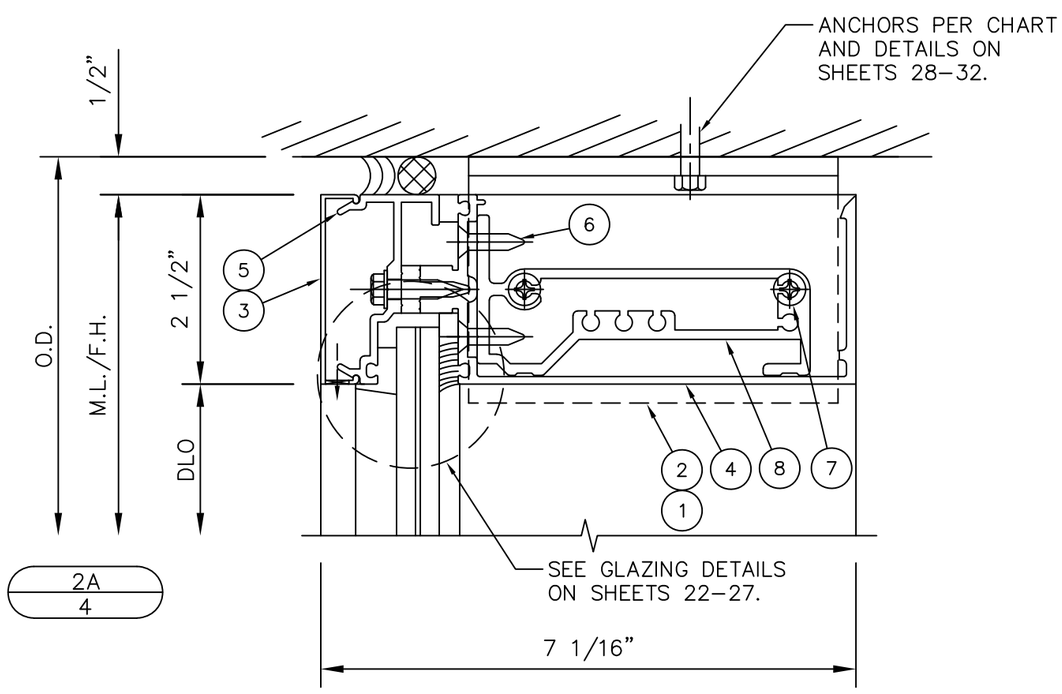

2A
4

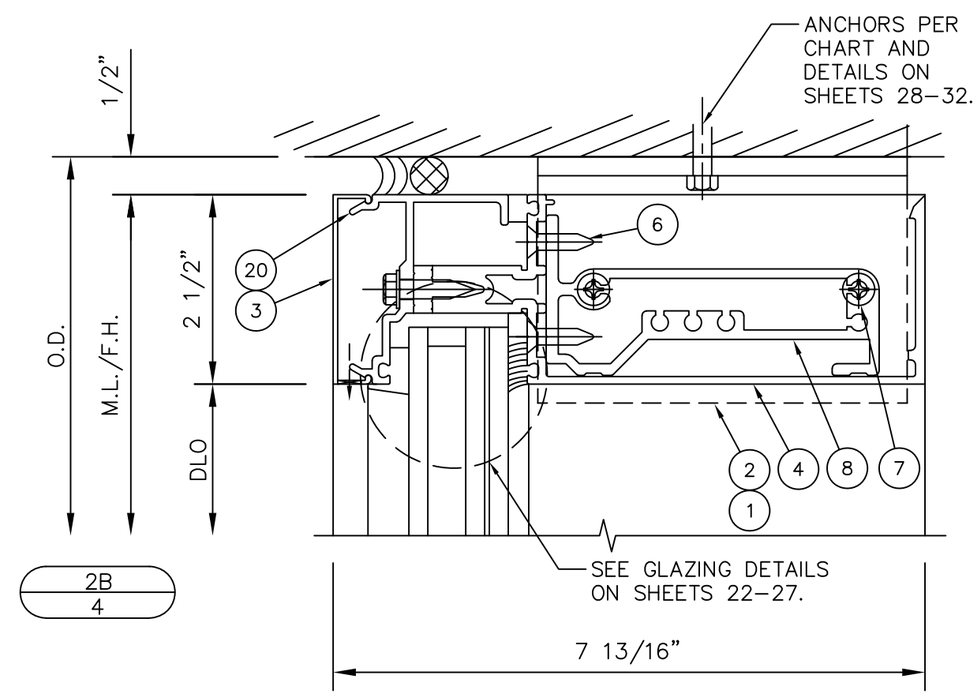

2B
4

REV.#	DATE	REVISION
–	12/16/24	–
–	10/15/23	2023 CODE UPDATE
–	10/12/20	1ST SUBMITTAL
–	–	PRINTS ISSUED FOR

KAWNEER
AN ARCONIC COMPANY
555 GUTHRIDGE COURT
NORCROSS, GA 30092
PH: (770) 449-5555
WWW.KAWNEER.COM

SEAL:

SCOTT WOLTERS
FL PE# 62354

WOLTERS ENGINEERING
(COA# 27194)
15211 97TH ROAD N
WEST PALM BEACH, FL 33412
(561) 225-1982

PRODUCT: 1600 WALL SYSTEM 1 & 2

DWG: 1600-IR-HVHZ

SECTION: 3

SHEET: 4/42

HORIZONTAL DETAILS

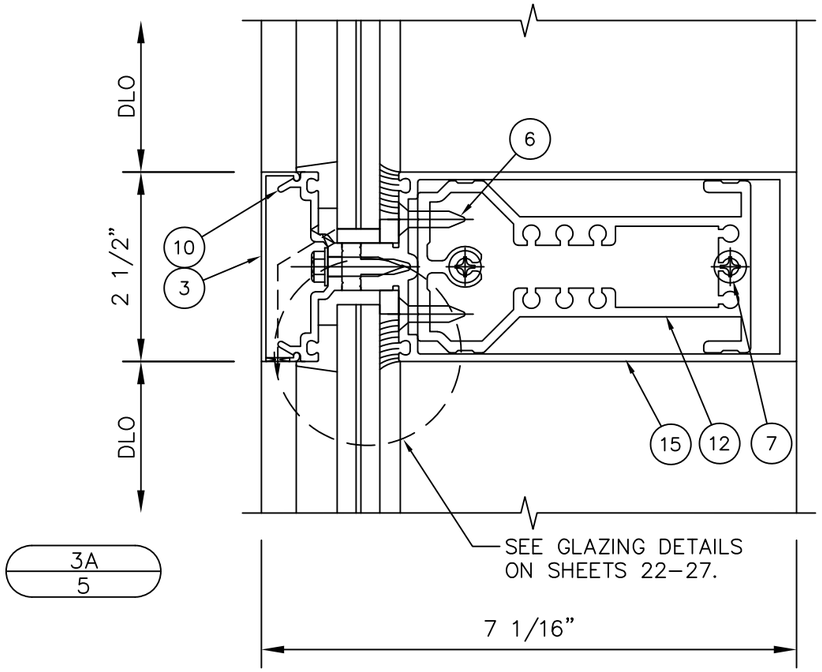

3A
5

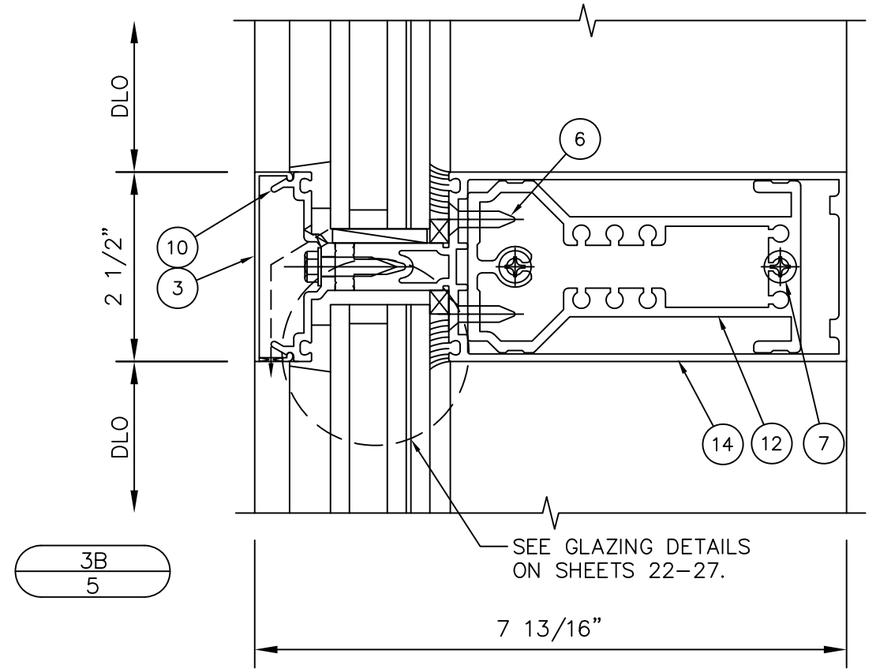

3B
5

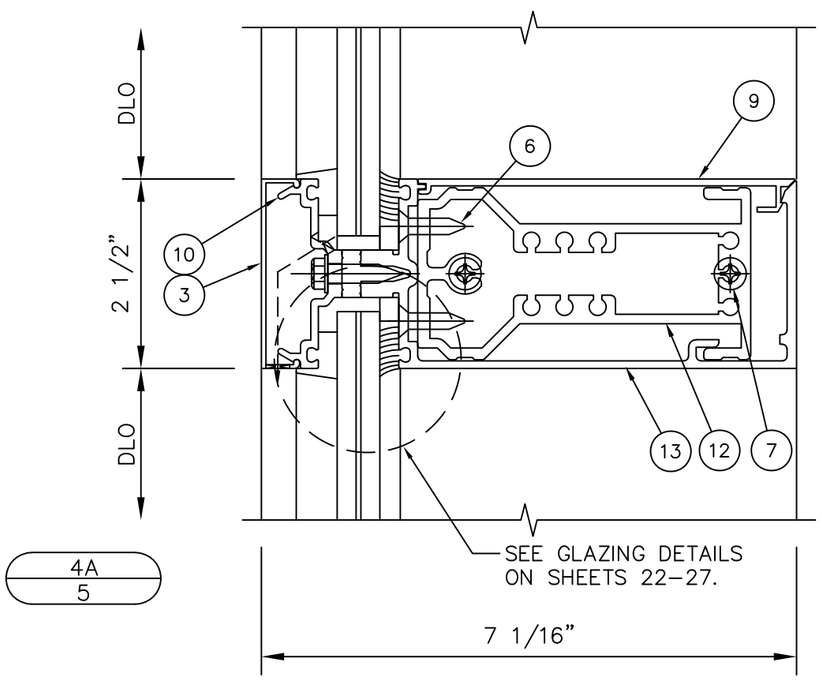

4A
5

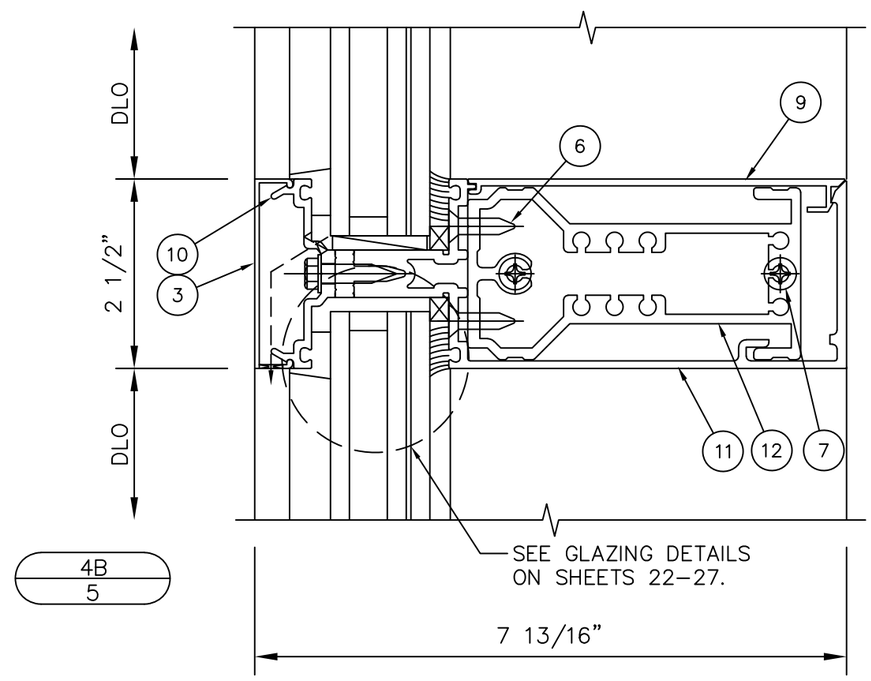

4B
5

REV.#	DATE	REVISION
–	12/16/24	2023 CODE UPDATE
–	10/15/23	1ST SUBMITTAL
–	10/12/20	PRINTS ISSUED FOR

KAWNEER
AN ARCONIC COMPANY
555 GUTHRIDGE COURT
NORCROSS, GA 30092
PH: (770) 449–5555
WWW.KAWNEER.COM

SEAL:

SCOTT WOLTERS
STATE OF FLORIDA
No 62354
PROFESSIONAL ENGINEER
AUG 17, 2026

SCOTT WOLTERS
FL PE# 62354

WOLTERS ENGINEERING
(COA# 27194)
15211 97TH ROAD N
WEST PALM BEACH, FL 33412
(561) 225–1982

PRODUCT:
1600 WALL SYSTEM 1 & 2

DWG:
1600–IR–HVHZ

SECTION:
3

SHEET:
5/42

HORIZONTAL DETAILS

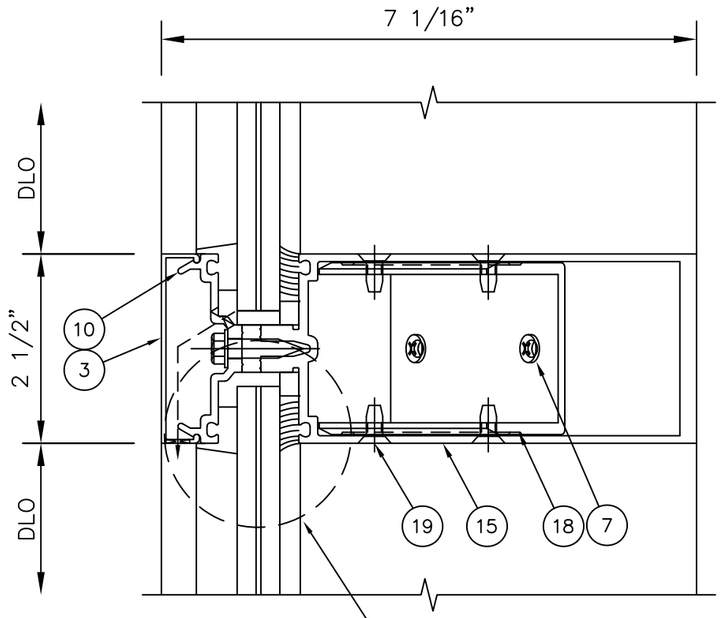

5A
6
(6B IS SIMILAR)

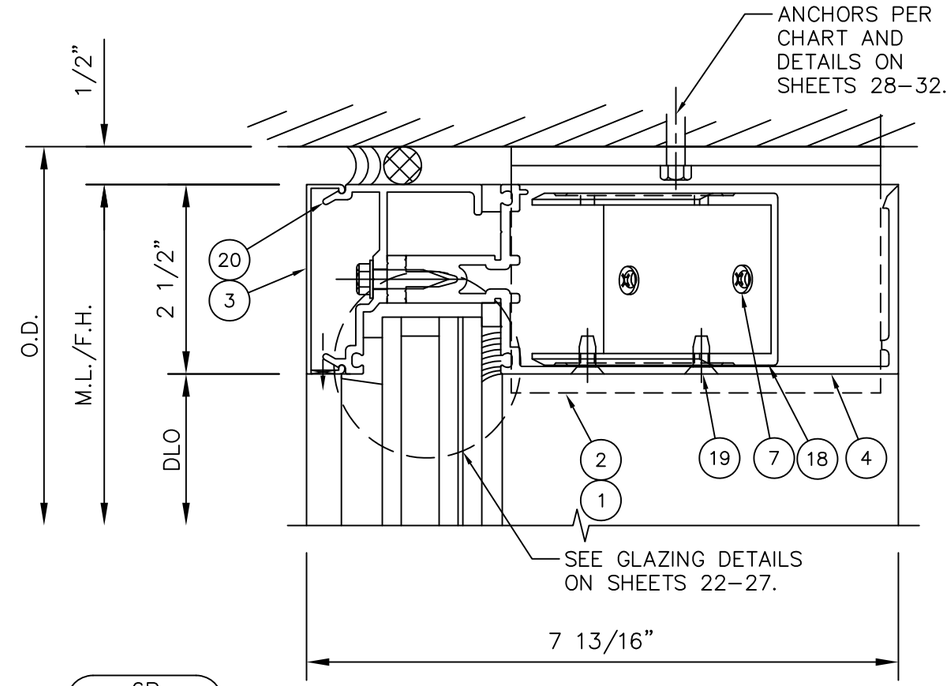

6B
6
(6A IS SIMILAR)

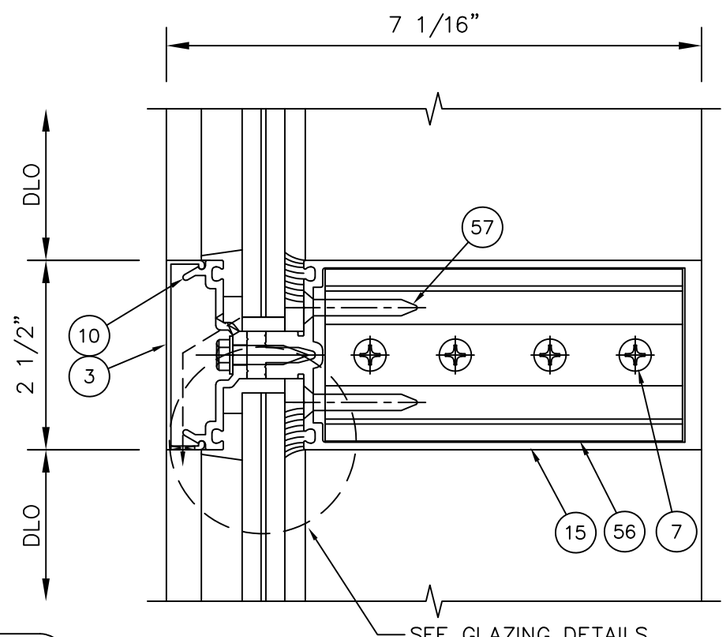

7A
6
(7B IS SIMILAR)

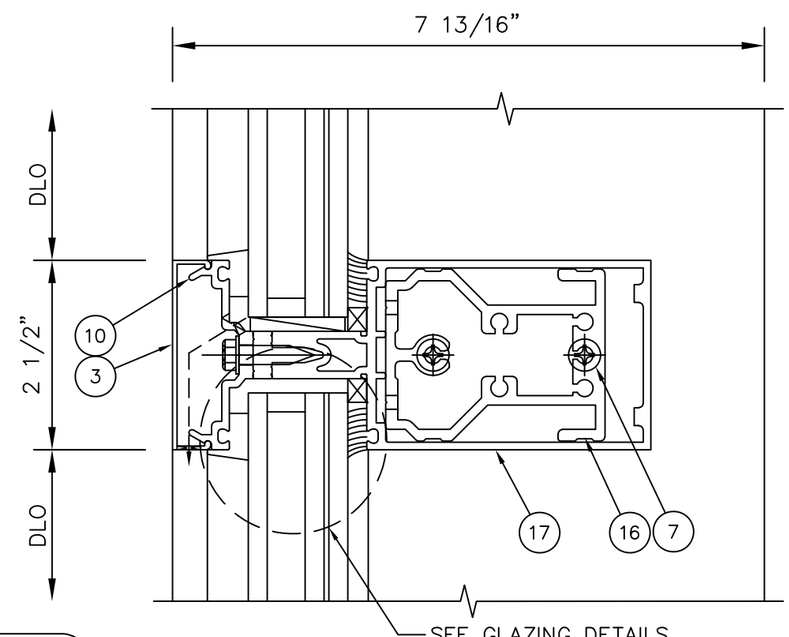

8B
6
(8A IS SIMILAR)

REV.#	DATE	REVISION
–	12/16/24	2023 CODE UPDATE
–	10/15/23	1ST SUBMITTAL
–	10/12/20	PRINTS ISSUED FOR

KAWNEER
AN ARCONIC COMPANY

555 GUTHRIDGE COURT
NORCROSS, GA 30092

PH: (770) 449–5555
WWW.KAWNEER.COM

SEAL:

SCOTT WOLTERS
FL PE# 62354

WOLTERS ENGINEERING
(COA# 27194)
15211 97TH ROAD N
WEST PALM BEACH, FL 33412
(561) 225–1982

PRODUCT:
1600 WALL
SYSTEM 1 & 2

DWG:
1600–IR–HVHZ

SECTION:
3

SHEET:
6/42

SILL DETAILS

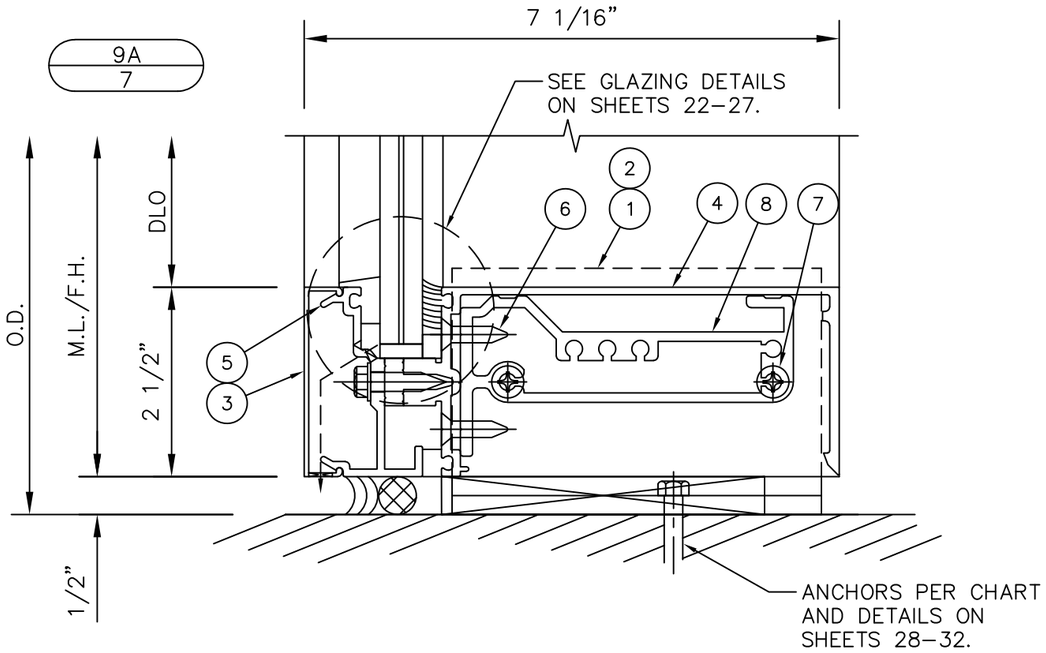

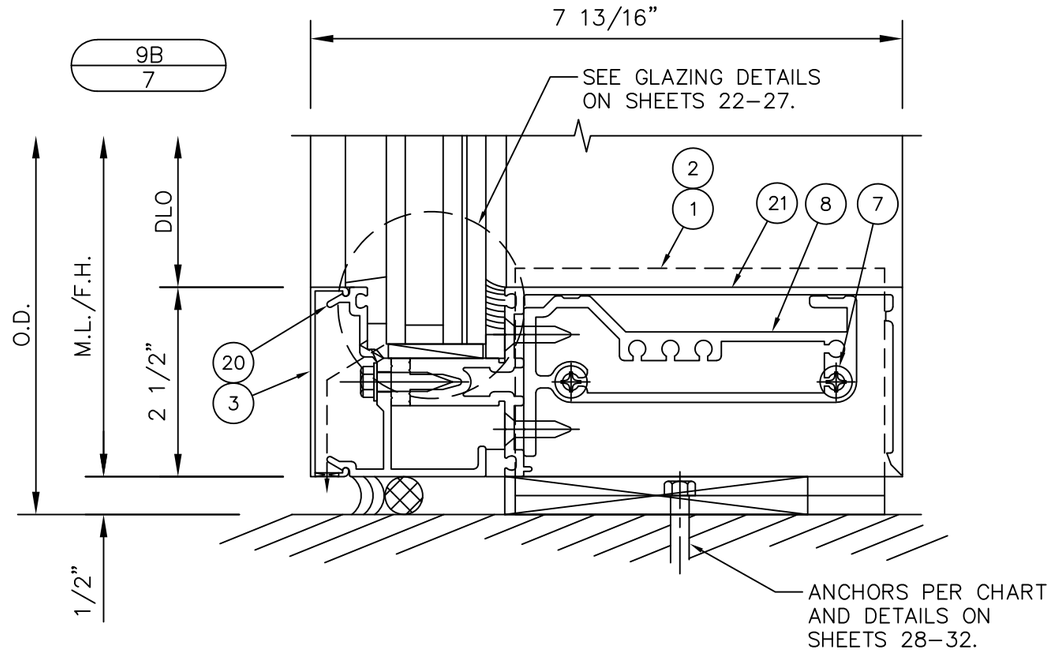

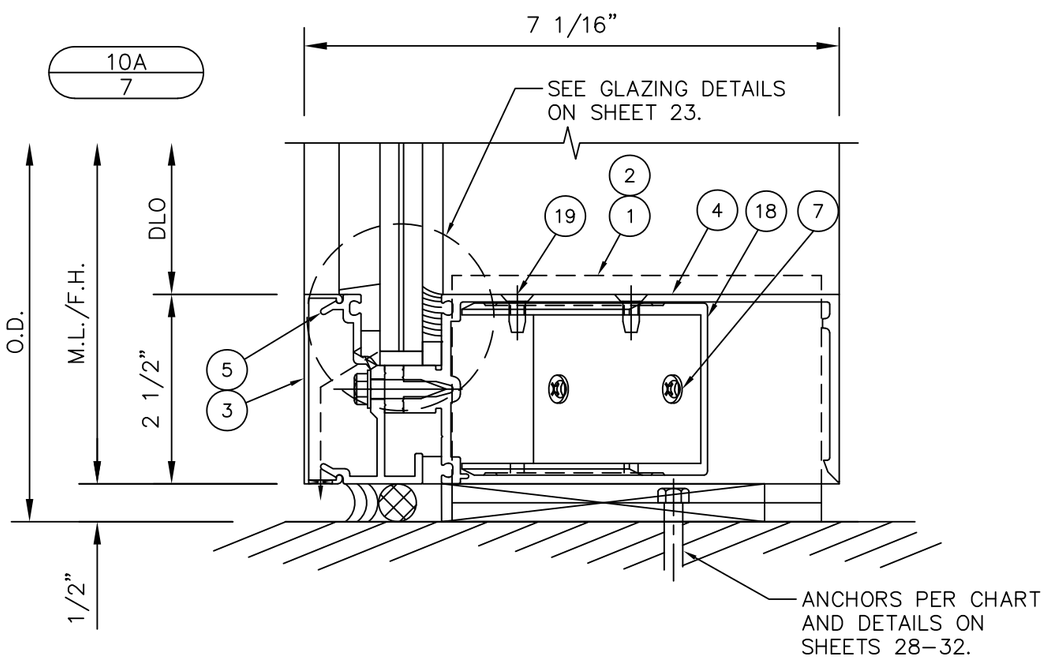

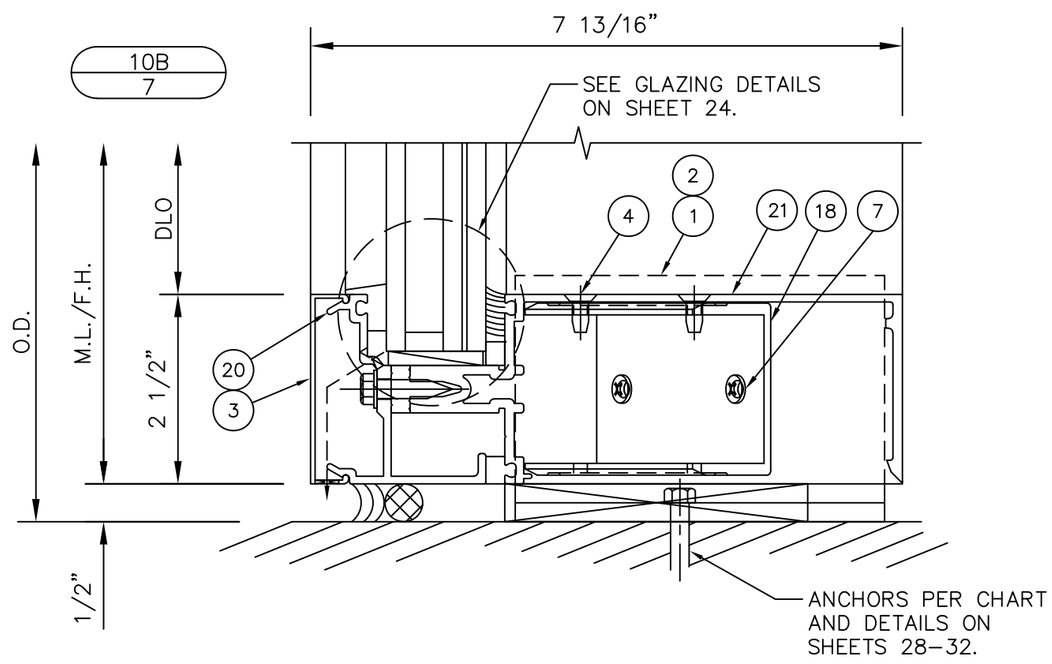

REV.#	REVISION	DATE
–	2023 CODE UPDATE	12/16/24
–	1ST SUBMITTAL	10/15/23
–	PRINTS ISSUED FOR	10/12/20

KAWNEER
AN ARCONIC COMPANY
555 GUTHRIDGE COURT
NORCROSS, GA 30092
PH: (770) 449-5555
WWW.KAWNEER.COM

SEAL:

SCOTT WOLTERS
FL PE# 62354

WOLTERS ENGINEERING
(COA# 27194)
15211 97TH ROAD N
WEST PALM BEACH, FL 33412
(561) 225-1982

PRODUCT: 1600 WALL SYSTEM 1 & 2

DWG: 1600-IR-HVHZ

SECTION: 3

JAMB DETAILS

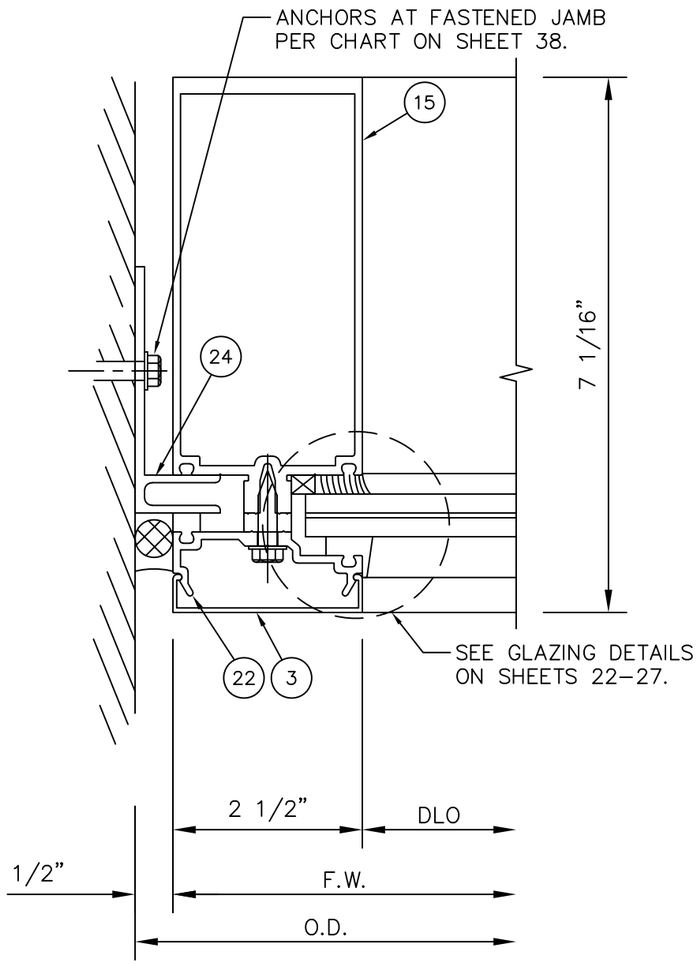

11A
8

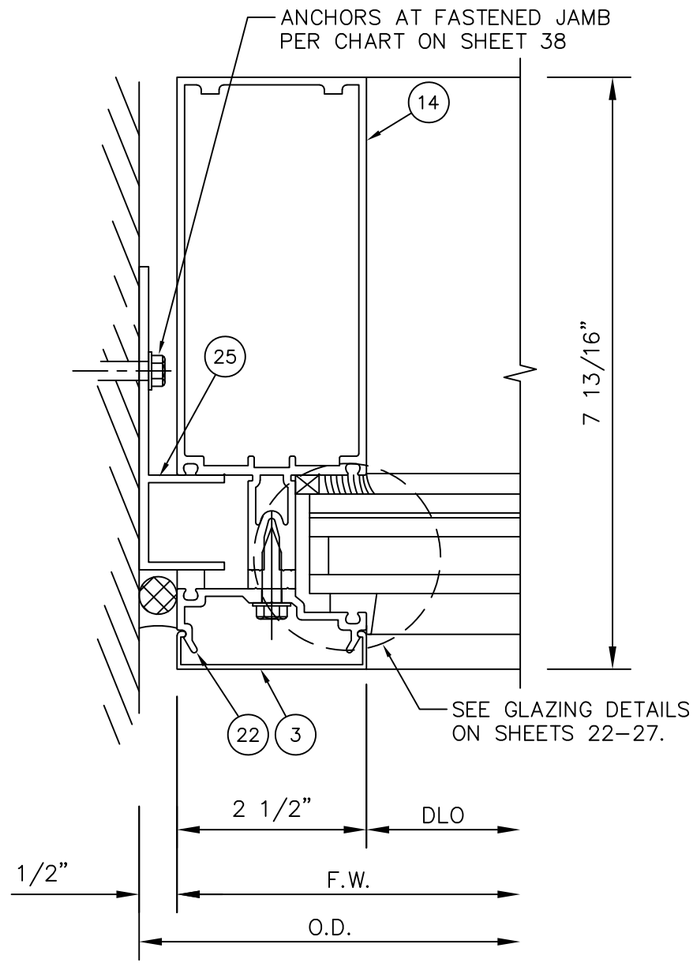

11B
8

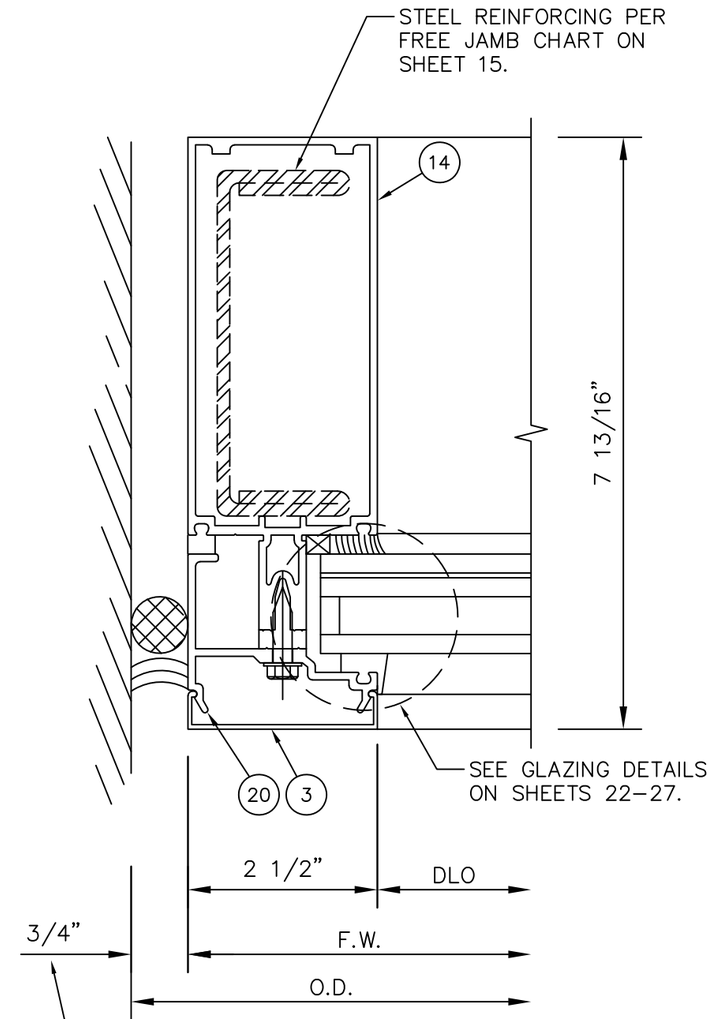

12A
8
(12B IS SIMILAR)

NOMINAL DIMENSION. PERIMETER SEALANT WIDTH MUST COMPLY WITH MANUFACTURER'S RECOMMENDATIONS AND ASTM C1472.

REV.#	DATE	
–	12/16/24	REVISION
–	10/15/23	2023 CODE UPDATE
–	10/12/20	1ST SUBMITTAL
		PRINTS ISSUED FOR

KAWNEER
AN ARCONIC COMPANY
555 GUTHRIDGE COURT
NORCROSS, GA 30092
PH: (770) 449-5555
WWW.KAWNEER.COM

SEAL:

SCOTT WOLTERS
FL PE# 62354

WOLTERS ENGINEERING
(COA# 27194)
15211 97TH ROAD N
WEST PALM BEACH, FL 33412
(561) 225-1982

PRODUCT:
1600 WALL SYSTEM 1 & 2

DWG:
1600-IR-HVHZ

SECTION:
3

SHEET:
8/42

MULLION DETAILS

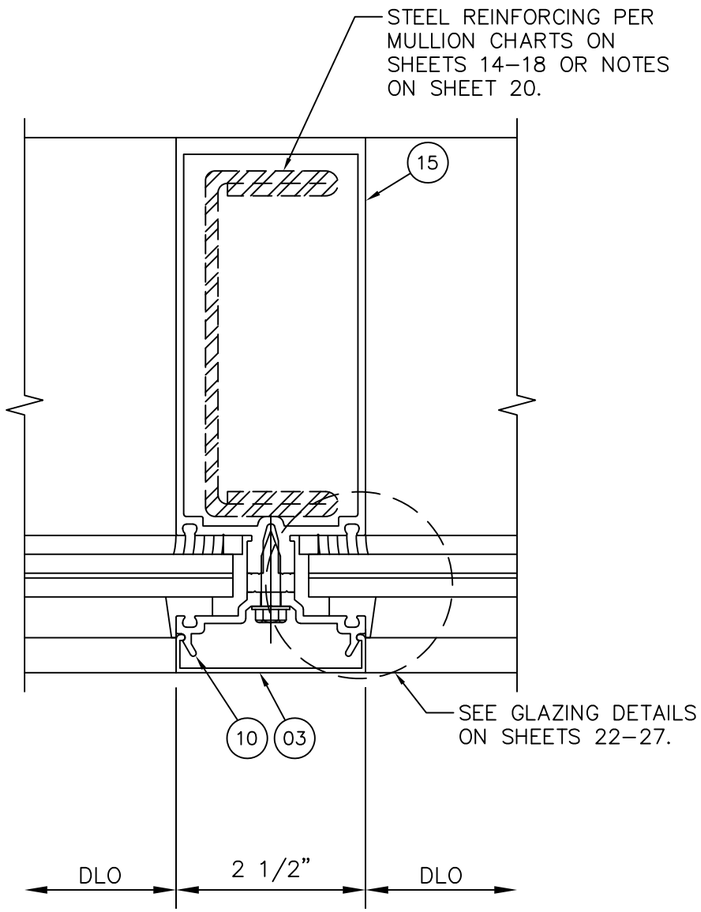

14A
9

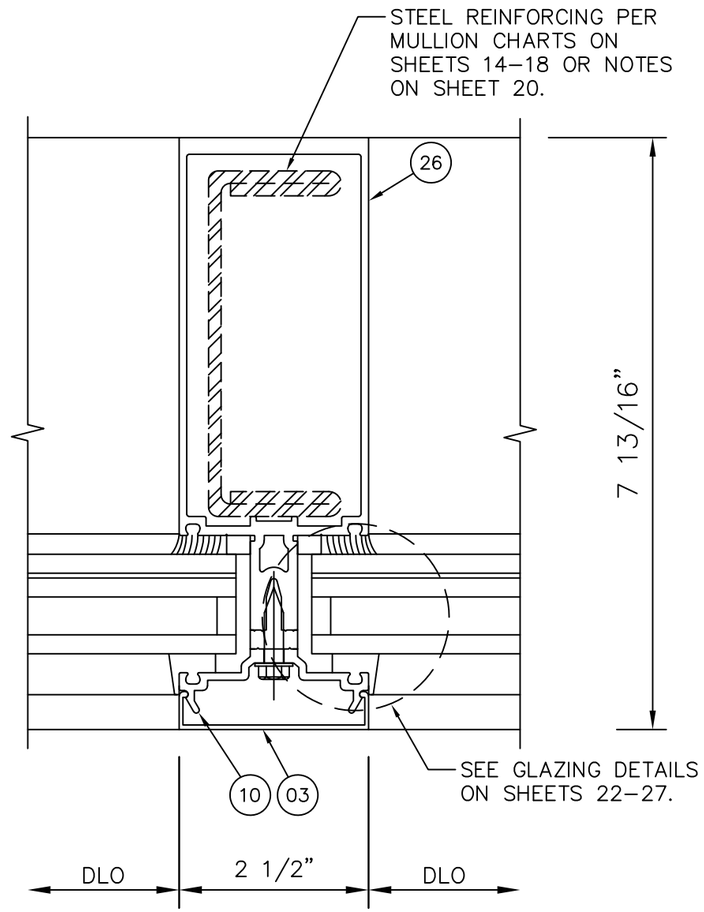

14B
9

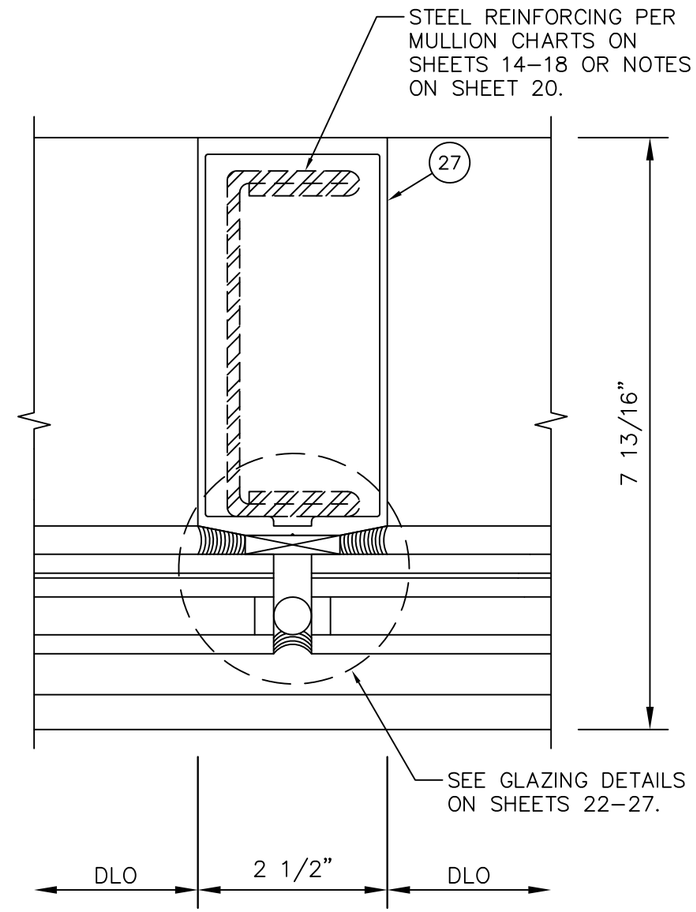

15A
9
(15B IS SIMILAR)

REV.#	REVISION	DATE
–	2023 CODE UPDATE	12/16/24
–	1ST SUBMITTAL	10/15/23
–	PRINTS ISSUED FOR	10/12/20

KAWNEER
AN ARCONIC COMPANY
555 GUTHRIDGE COURT
NORCROSS, GA 30092
PH: (770) 449-5555
WWW.KAWNEER.COM

SEAL:

SCOTT WOLTERS
FL PE# 62354

WOLTERS ENGINEERING
(COA# 27194)
15211 97TH ROAD N
WEST PALM BEACH, FL 33412
(561) 225-1982

PRODUCT:
1600 WALL SYSTEM 1 & 2

DWG:
1600-IR-HVHZ

SECTION:
3

SHEET:
9/42

CAPTURED CORNER DETAILS

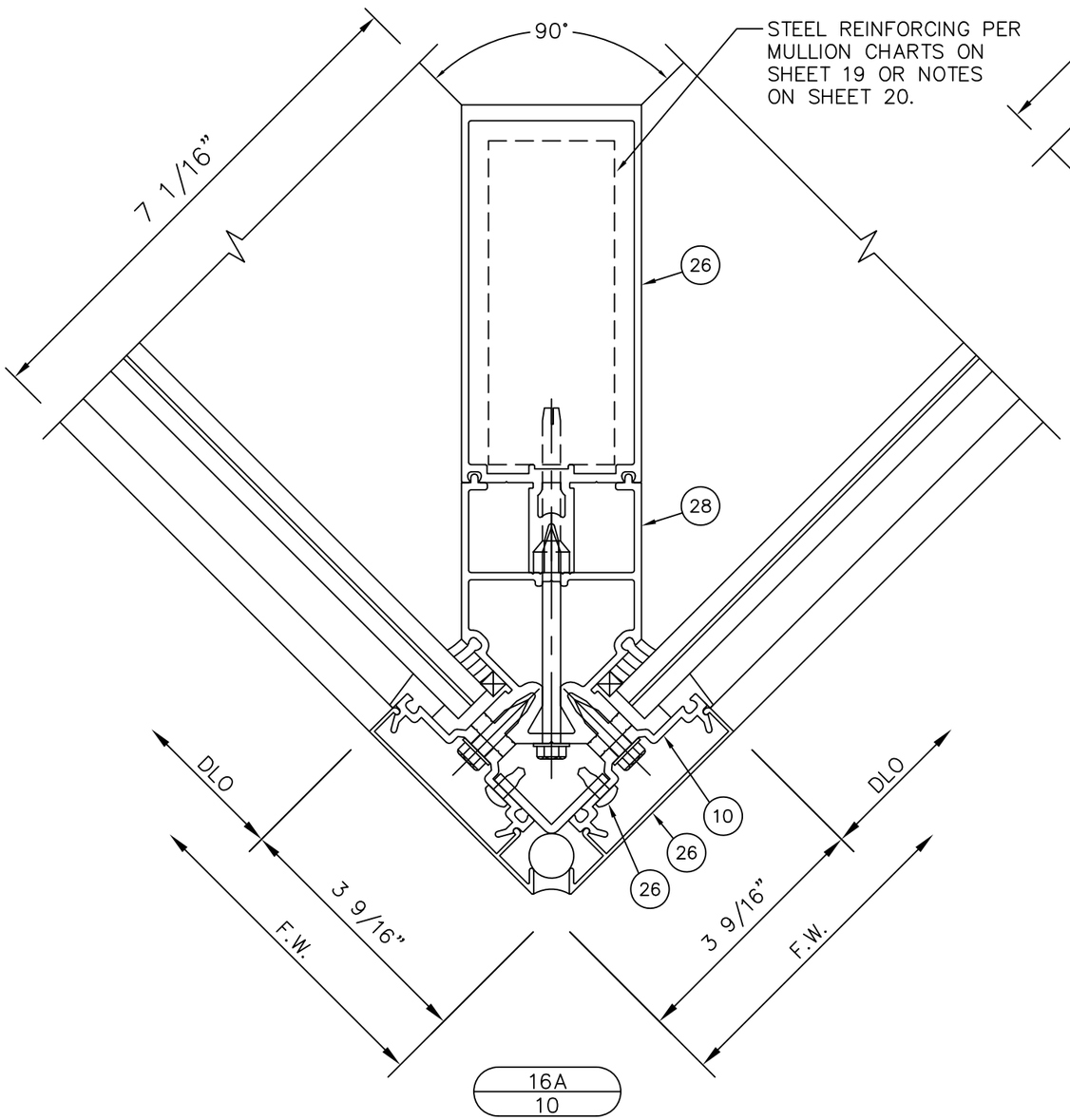

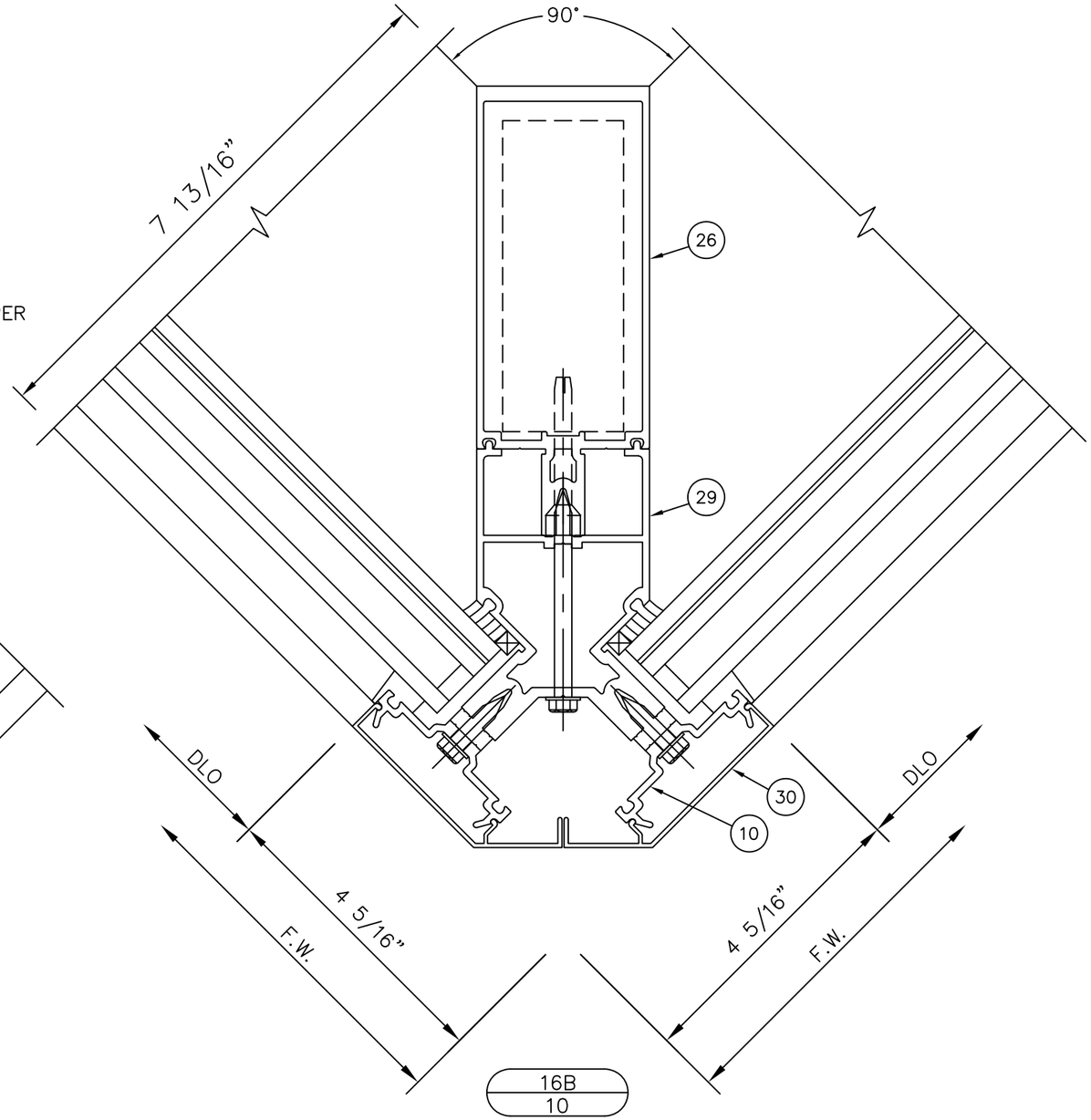

REV.#	REVISION	DATE
–	–	–
–	–	–
–	–	–
–	–	–
–	–	–
–	2023 CODE UPDATE	12/16/24
–	1ST SUBMITTAL	10/15/23
–	PRINTS ISSUED FOR	10/12/20

KAWNEER
AN ARCONIC COMPANY
555 GUTHRIDGE COURT
NORCROSS, GA 30092
PH: (770) 449-5555
WWW.KAWNEER.COM

SEAL:

SCOTT WOLTERS
LICENSED
No 62354
STATE OF FLORIDA
PROFESSIONAL ENGINEER
AUG 9 7, 2026

SCOTT WOLTERS
FL PE# 62354

WOLTERS ENGINEERING
(COA# 27194)
15211 97TH ROAD N
WEST PALM BEACH, FL 33412
(561) 225-1982

PRODUCT:
1600 WALL SYSTEM 1 & 2

DWG:
1600-IR-HVHZ

SECTION:
3

SHEET:
10/42

SSG CORNER DETAILS

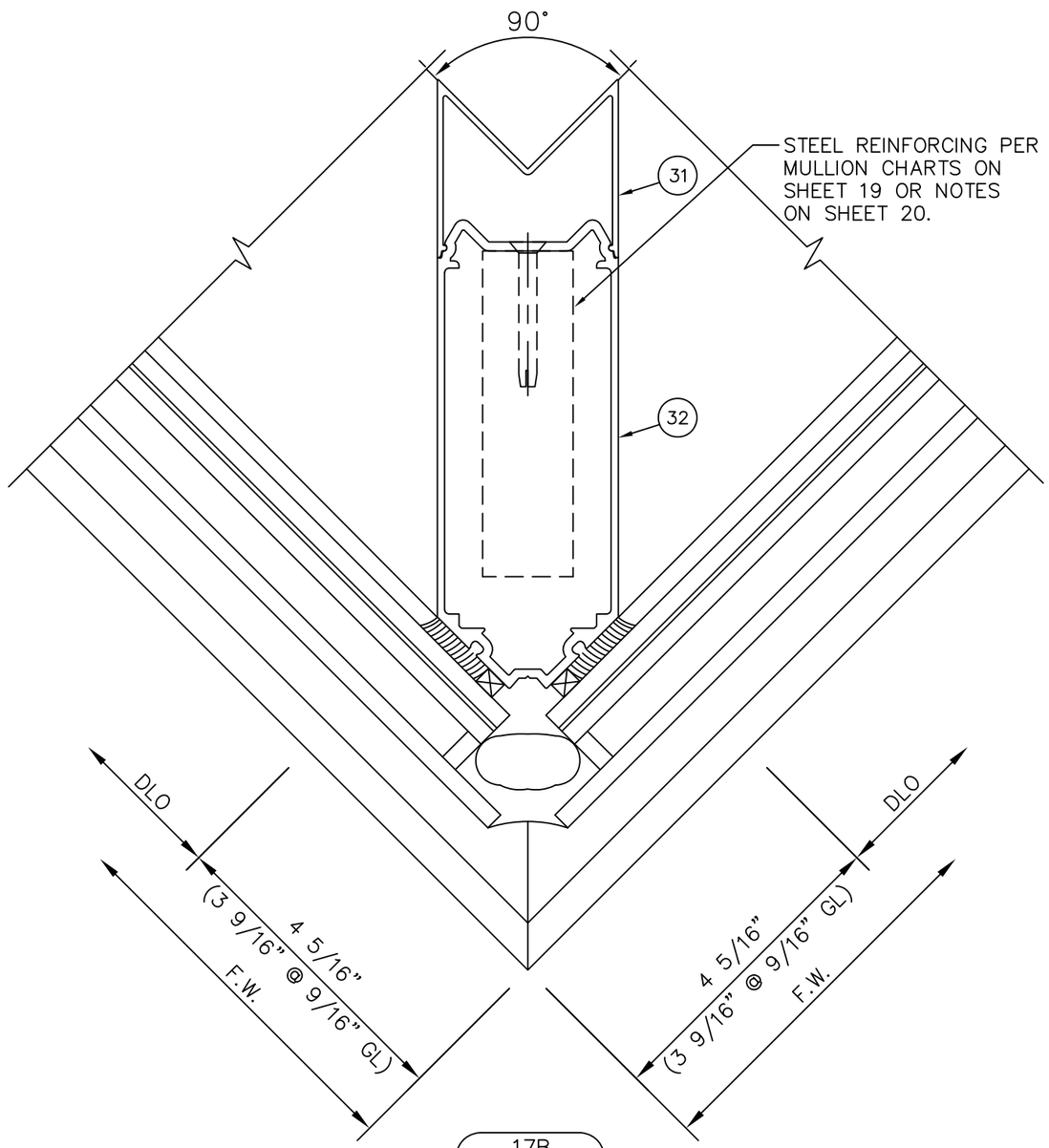

17B
11
(17A IS SIMILAR)

OPTIONAL TWO–MULLION CORNER.
ALLOWABLE MULLION HEIGHT, SPACING, AND DESIGN PRESSURE PER STANDARD MULLION CHARTS ON SHEETS 14,16–18, OR 20.

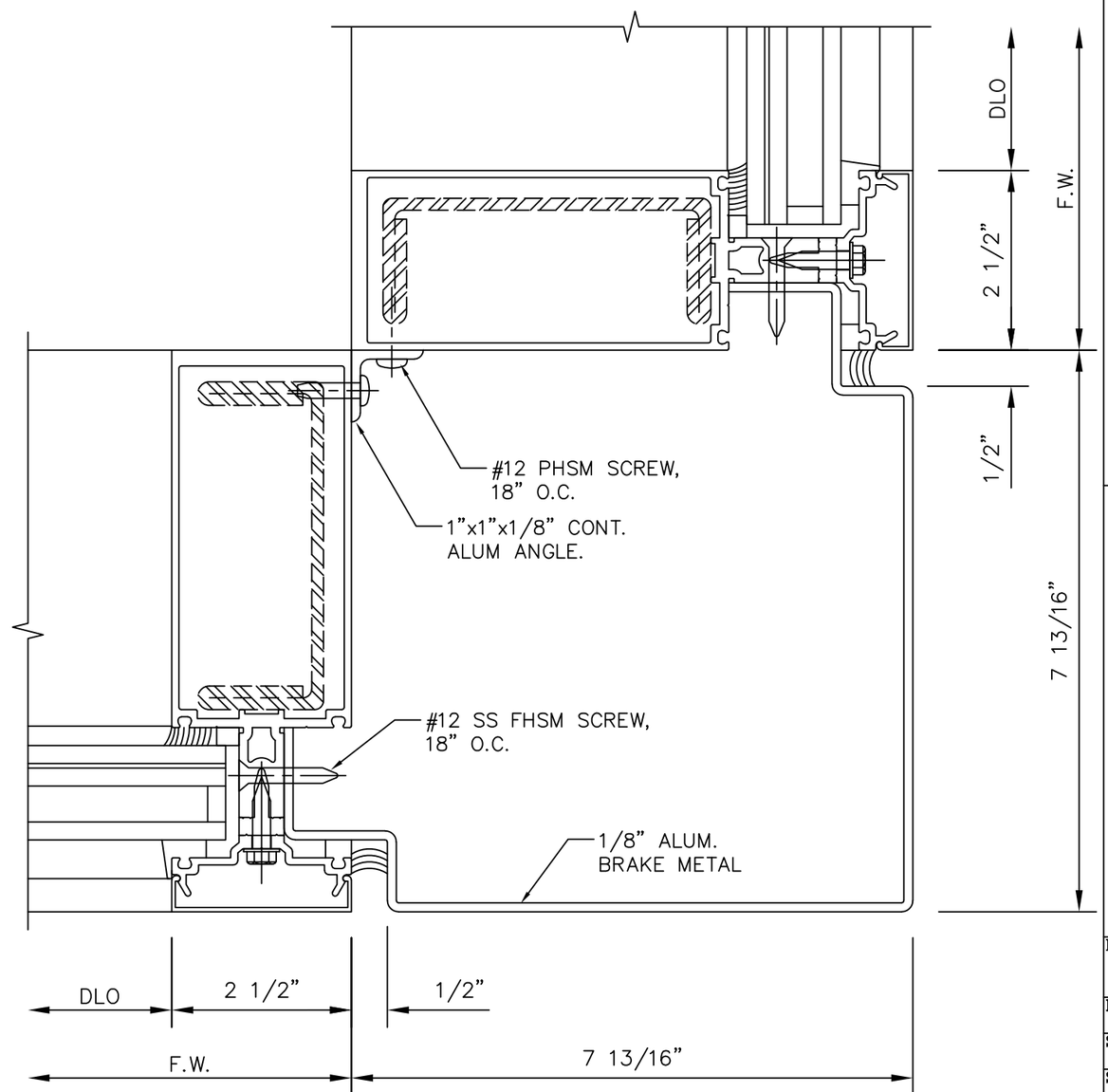

REV.#	DATE	REVISION
–	12/16/24	–
–	10/15/23	2023 CODE UPDATE
–	10/12/20	1ST SUBMITTAL
–	–	PRINTS ISSUED FOR

KAWNEER
AN ARCONIC COMPANY
555 GUTHRIDGE COURT
NORCROSS, GA 30092
PH: (770) 449–5555
WWW.KAWNEER.COM

SEAL:

SCOTT WOLTERS
FL PE# 62354

WOLTERS ENGINEERING
(COA# 27194)
15211 97TH ROAD N
WEST PALM BEACH, FL 33412
(561) 225–1982

SCOTT WOLTERS LICENSE No 62354 STATE OF FLORIDA PROFESSIONAL ENGINEER
AUG 27, 2026

PRODUCT: 1600 WALL SYSTEM 1 & 2
DWG: 1600–IR–HVHZ
SECTION: 3
SHEET: 11/42

MULLION SPLICE DETAILS

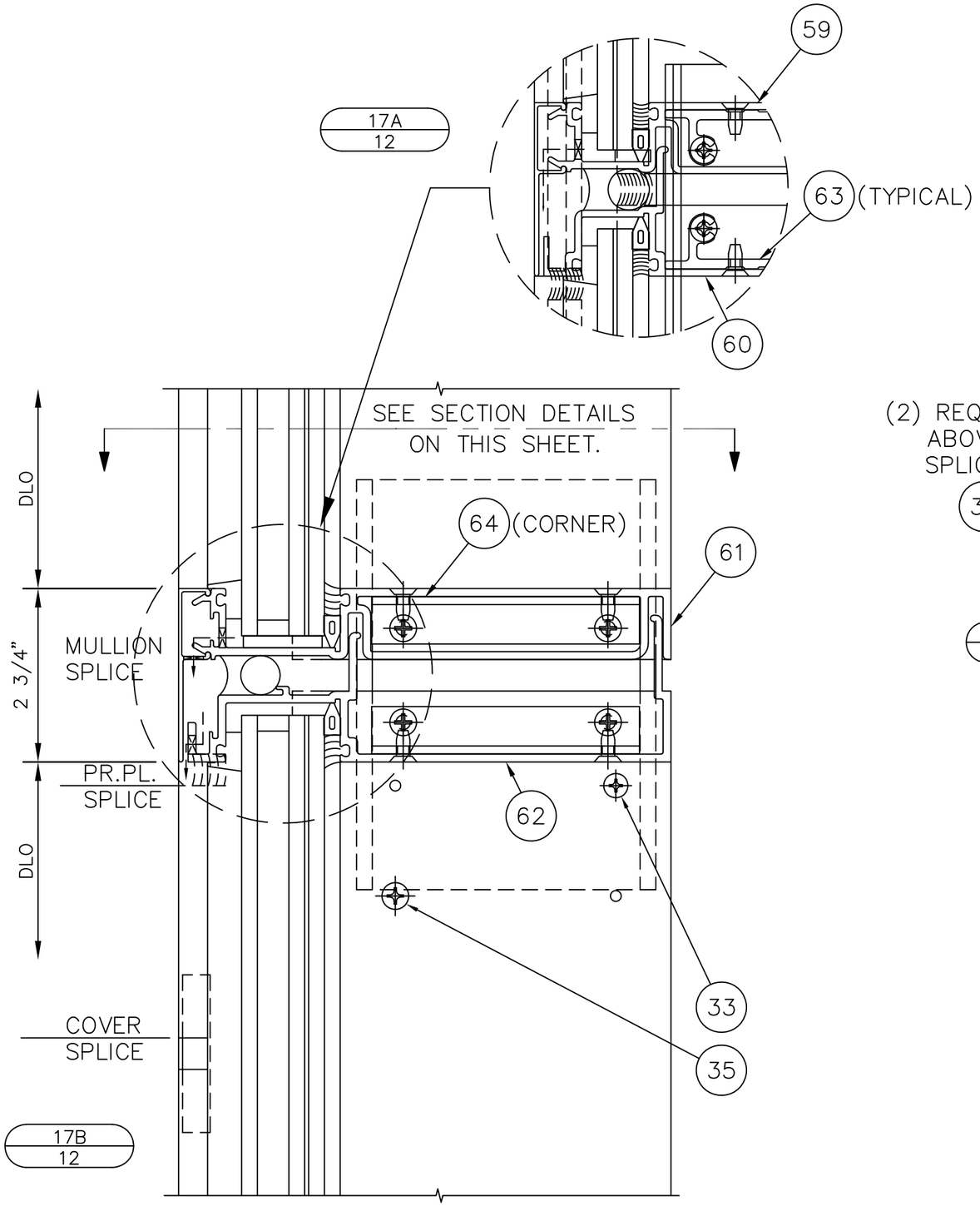

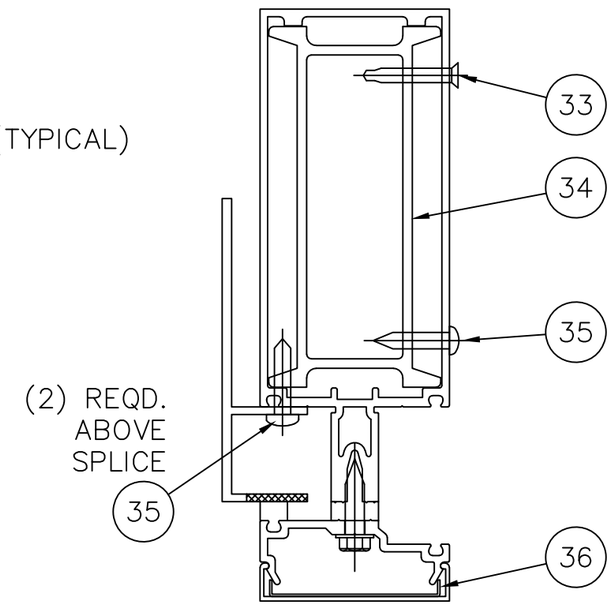

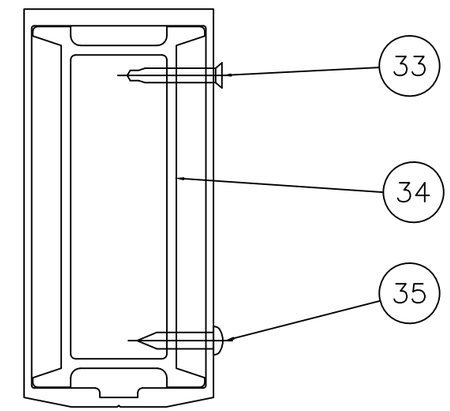

SECTION
AT SPLICE

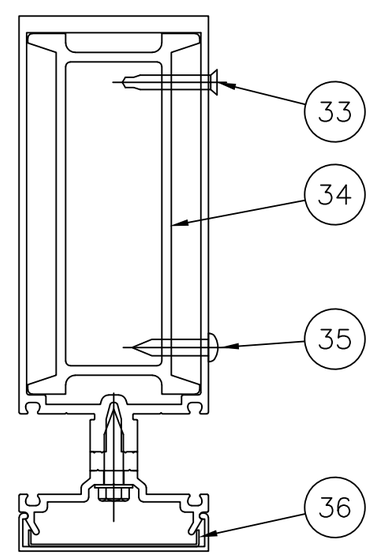

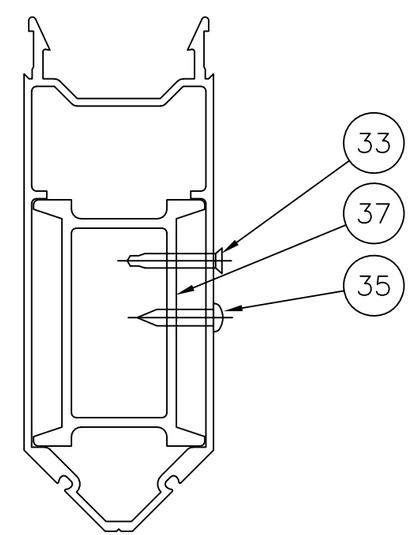

REV.#	DATE	REVISION
–	12/16/24	2023 CODE UPDATE
–	10/15/23	1ST SUBMITTAL
–	10/12/20	PRINTS ISSUED FOR

KAWNEER
AN ARCONIC COMPANY

555 GUTHRIDGE COURT
NORCROSS, GA 30092

PH: (770) 449-5555
WWW.KAWNEER.COM

SEAL:

SCOTT WOLTERS
FL PE# 62354

WOLTERS ENGINEERING
(COA# 27194)
15211 97TH ROAD N
WEST PALM BEACH, FL 33412
(561) 225-1982

PRODUCT:
1600 WALL
SYSTEM 1 & 2

DWG:
1600-IR-HVHZ

SECTION:
3

SHEET:
12/42

DOOR DETAILS

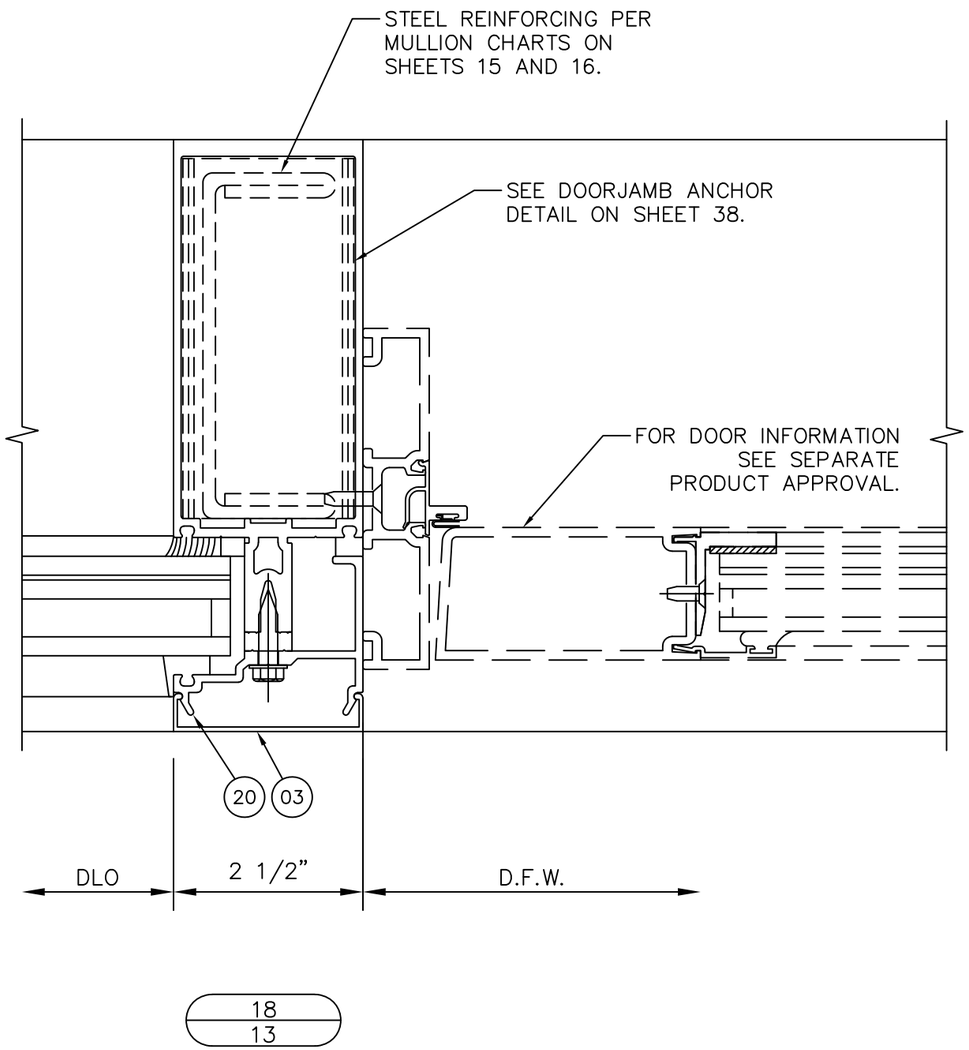

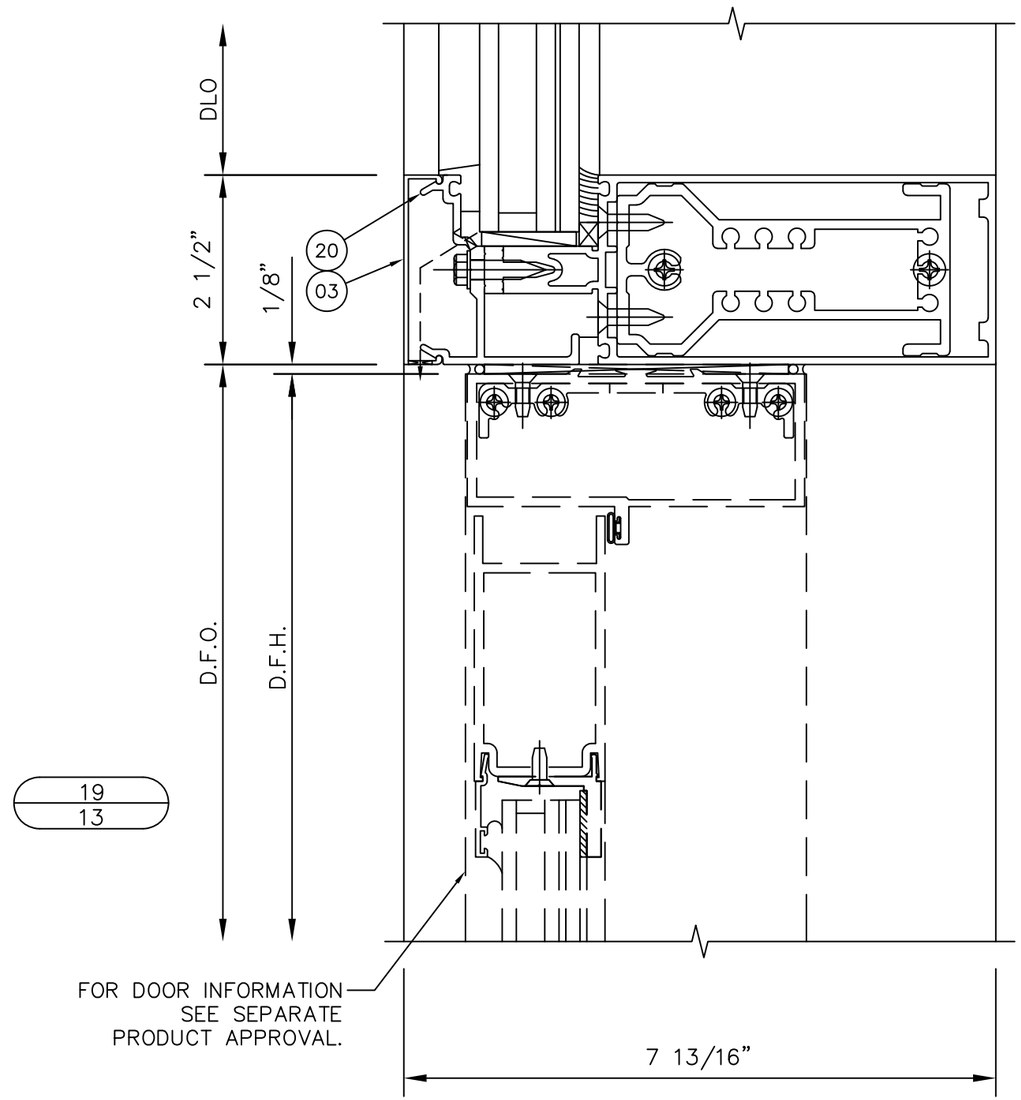

REV.#	DATE	REVISION
–	12/16/24	–
–	10/15/23	2023 CODE UPDATE
–	10/12/20	1ST SUBMITTAL
–		PRINTS ISSUED FOR

KAWNEER
AN ARCONIC COMPANY
555 GUTHRIDGE COURT
NORCROSS, GA 30092
PH: (770) 449-5555
WWW.KAWNEER.COM

SEAL:

SCOTT WOLTERS
FL PE# 62354

WOLTERS ENGINEERING
(COA# 27194)
15211 97TH ROAD N
WEST PALM BEACH, FL 33412
(561) 225-1982

PRODUCT: 1600 WALL SYSTEM 1 & 2

DWG: 1600-IR-HVHZ

SECTION: 3

SHEET: 13/42

SINGLE SPAN MULLION LIMITATIONS

CAPTURED MULLIONS

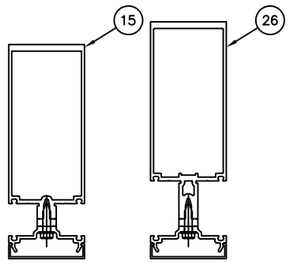

MULLION M1

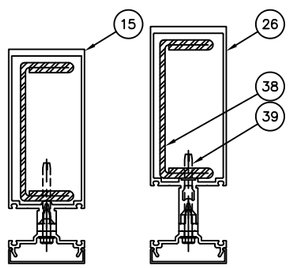

MULLION M2

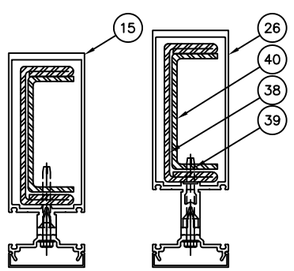

MULLION M3

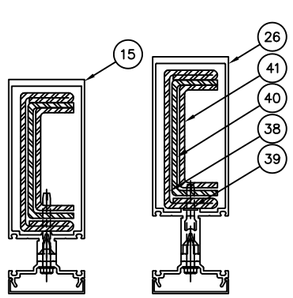

MULLION M4

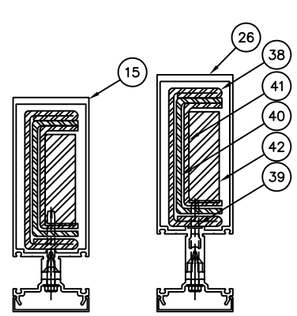

MULLION M5

CAPTURED MULLION CHART

HEIGHT (in)	WIDTH (in)	MAX. DESIGN PRESSURE (psf) MULLION M1 (+)	MULLION M1 (-)	MULLION M2 (+)	MULLION M2 (-)
72	61	**100**	**130**	100	130
	72	84.7	110.1	84.7	110.1
	84	72.6	94.4	72.6	94.4
	96	63.2	82.2	63.5	82.6
84	54	97.1	118.6	98	127
	61	97.1	118.6	98	127
	72	82.3	100	83	107.6
	83	71.4	87.1	72	93.3
	96	-	-	62.3	80.7
96	54	94.3	107.1	96	124.1
	61	94.3	107.1	96	124.1
	72	79.9	90.7	81.3	105.1
	84	-	-	69.7	90.1
	96	-	-	61	78.9
108	54	91.4	95.7	94	121.7
	61	91.4	95.7	94	121.7
	64	87.1	91.2	89.6	116
	72	-	-	79.6	103.1
	84	-	-	68.3	88.4
	89	-	-	64.4	83.4
114	36	90	90	93	119.6
	48	90	90	93	119.6
	61	**90**	**90**	93	119.6
	72	-	-	78.8	101.3
	85	-	-	66.7	85.8

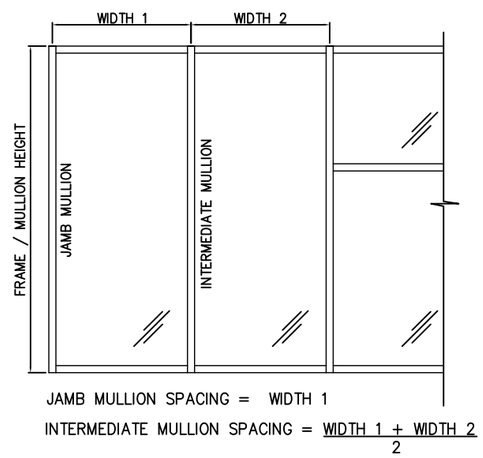

SHADED VALUES ARE APPROVED FOR USE OUTSIDE OF THE HVHZ ONLY

CAPTURED MULLION CHART

HEIGHT (in)	WIDTH (in)	MAX. DESIGN PRESSURE (psf) MULLION M1 (+)	MULLION M1 (-)	MULLION M2 (+)	MULLION M2 (-)	MULLION M3 (+)	MULLION M3 (-)	MULLION M4 (+)	MULLION M4 (-)	MULLION M5 (+)	MULLION M5 (-)
114	61	90	90	93	119.6	93	127	93	127	93	127
	72	-	-	78.8	101.3	93	110.6	93	110.6	93	110.6
	85	-	-	66.7	85.8	93	93.6	93	93.6	93	93.6
	88 1/2	-	-	-	-	90	90	90	90	90	90
	96	-	-	-	-	-	-	83	83	83	83
123	48	90	90	91.5	127	91.5	127	91.5	127	91.5	127
	52	84	84	91.5	127	91.5	127	91.5	127	91.5	127
	56 3/8	77.5	77.5	91.5	**127**	91.5	127	91.5	127	91.5	127
	60	-	-	91.5	119.3	91.3	127	91.3	127	91.3	127
	68 3/8	-	-	83.2	108.5	90.9	**127**	90.9	127	90.9	127
	78 3/4	-	-	69.7	90.9	90.2	94.7	90.2	94.7	90.2	94.7
	82	-	-	-	-	90	90	90	90	90	90
	86 1/2	-	-	-	-	-	-	85.3	85.3	85.3	85.3
	96	-	-	-	-	-	-	76.9	76.9	76.9	76.9
132	42	84.2	84.2	90	127	90	127	90	127	90	127
	48	73.6	73.6	90	112.5	90	127	90	127	90	127
	52 1/2	67.3	67.3	90	102.8	90	127	90	127	90	127
	60	-	-	**90**	**90**	90	114.4	90	114.4	90	114.4
	66	-	-	81.8	81.8	90	104	90	104	90	104
	73 1/2	-	-	73.5	73.5	90	93.3	90	94.5	90	94.5
	76 1/4	-	-	-	-	90	90	90	91	90	91
	80 1/2	-	-	-	-	-	-	84	85.5	84	85.5
	88	-	-	-	-	-	-	73.5	76	73.5	76
	96	-	-	-	-	-	-	62.2	65.8	62.2	65.8
147	36	71.1	71.1	90	127	90	127	90	127	90	127
	42	61	61	90	110	90	127	90	127	90	127
	47	54.5	54.5	90	98.3	90	127	90	127	90	127
	60	-	-	77	77	90	102.9	90	102.9	90	102.9
	66	-	-	**70**	**70**	90	93.5	90	93.5	90	93.5
	68 5/8	-	-	-	-	**90**	**90**	90	90	90	90
	72 1/4	-	-	-	-	-	-	84.3	85	84.3	85
	80	-	-	-	-	-	-	72.1	74.4	72.1	74.4
	89	-	-	-	-	-	-	58	62	58	62
156	36	59.5	59.5	90	107.4	90	127	90	127	90	127
	41 1/4	51.9	51.9	90	93.7	90	125.3	90	126.2	90	126.2
	44 1/2	48.1	48.1	86.8	86.8	90	116.1	90	117	90	117
	54	-	-	71.6	71.6	90	95.7	90	96.4	90	96.4
	62	-	-	62.3	62.3	83.2	83.2	83.2	84	83.2	84
	64 1/2	-	-	-	-	80	80	80	80.7	80	80.7
	72	-	-	-	-	-	-	67.7	72.3	67.7	72.3
	84	-	-	-	-	-	-	**58**	**62**	58	62
168	36	47.6	47.6	86	86	90	114.9	90	115.8	90	124.9
	41	41.8	41.8	75.5	75.5	90	100.9	90	101.7	90	109.6
	50	-	-	61.9	61.9	82.7	82.7	82.7	83.4	89.9	89.9
	57 1/2	-	-	53.8	53.8	72	72	72	72.5	78.2	78.2
	60	-	-	-	-	69	69	69	69.4	74.9	74.9
	69	-	-	-	-	-	-	60	60.4	65.1	65.1
	78	-	-	-	-	-	-	53.1	53.4	57.6	57.6
174	37	-	-	75.3	75.3	90	100.6	90	101.4	90	117.3
	48	-	-	58	58	77.6	77.6	77.6	78.2	90	90.4
	55 1/2	-	-	50.2	50.5	67.1	67.1	67.1	67.6	78.2	78.2
	58	-	-	-	-	64.2	64.2	64.2	64.7	74.8	74.8
	66 1/2	-	-	-	-	-	-	56	56.4	65.2	65.2
	75 1/4	-	-	-	-	-	-	49.5	49.9	57.6	57.6
183	35 5/16	-	-	**71**	**71**	90	93	90	93	90	116.8
	42	-	-	59.7	59.7	78.2	78.2	78.2	78.2	90	98.2
	46 1/4	-	-	54.2	54.2	**71**	**71**	71	71	89.2	89.2
	53	-	-	47.3	47.3	62	62	62	62	77.8	77.8
	55	-	-	-	-	59.7	59.7	59.7	59.7	75	75
	58 1/8	-	-	-	-	-	-	56.7	56.7	**71**	**71**
	63	-	-	-	-	-	-	48.9	48.9	65.5	65.5
	71 1/2	-	-	-	-	-	-	45.9	45.9	57.5	57.7
195	36	-	-	51.3	51.3	73.5	73.5	76.8	76.8	94.7	94.7
	43	-	-	**43**	**43**	61.5	61.5	64.4	64.4	79.3	79.3
	49 1/2	-	-	37.3	37.3	53.4	53.4	56	56	68.9	68.9
	51 1/2	-	-	-	-	51.4	51.4	53.8	53.8	66.2	66.2
	59 1/2	-	-	-	-	-	-	46.5	46.5	57.3	57.3
	67	-	-	-	-	-	-	41.3	41.3	50.9	50.9
199	36	-	-	48.3	48.3	70.9	70.9	75.4	75.4	89.1	89.1
	42	-	-	41.4	41.4	60.8	60.8	64.6	64.6	76.4	76.4
	48 3/4	-	-	35.7	35.7	52.4	52.4	55.7	55.7	65.8	65.8
	50 1/2	-	-	-	-	50.5	50.5	53.8	53.8	63.5	63.5
	54 5/16	-	-	-	-	-	-	**50**	**50**	59.1	59.1
	60	-	-	-	-	-	-	45.2	45.2	53.5	53.5
	65 3/4	-	-	-	-	-	-	41.3	41.3	48.8	48.8
204	36	-	-	44.9	44.9	65.8	65.8	70	70	82.7	82.7
	42	-	-	38.5	38.5	56.4	56.4	60	60	70.9	70.9
	47 1/2	-	-	34	34	49.9	59.9	53	53	62.7	62.7
	49 1/2	-	-	-	-	47.9	47.9	50.9	50.9	60.2	60.2
	56 3/4	-	-	-	-	-	-	44.4	44.4	52.5	52.5
	64 1/4	-	-	-	-	-	-	39.2	39.2	46.3	46.3
216	36	-	-	37.8	37.8	55.5	55.5	59	59	69.7	69.7
	42	-	-	32.4	32.4	47.5	47.5	50.5	50.5	59.7	59.7
	44 3/4	-	-	30.4	30.4	44.6	44.6	47.4	47.4	56.1	56.1
	46 1/2	-	-	-	-	42.9	42.9	45.6	45.6	54	54
	54	-	-	-	-	-	-	39.3	39.3	46.5	46.5
	60 1/2	-	-	-	-	-	-	35.1	35.1	41.5	41.5

REV.#	DATE	REVISION
–	12/16/24	2023 CODE UPDATE
–	10/15/23	1ST SUBMITTAL
–	10/12/20	PRINTS ISSUED FOR

KAWNEER
AN ARCONIC COMPANY
555 GUTHRIDGE COURT
NORCROSS, GA 30092
PH: (770) 449-5555
WWW.KAWNEER.COM

SEAL:

SCOTT WOLTERS
FL PE# 62354

WOLTERS ENGINEERING
(COA# 27194)
15211 97TH ROAD N
WEST PALM BEACH, FL 33412
(561) 225-1982

PRODUCT: 1600 WALL SYSTEM 1 & 2

DWG: 1600-IR-HVHZ

SECTION: 4

SHEET: 14/42

SINGLE SPAN MULLION LIMITATIONS

FREE JAMB MULLIONS

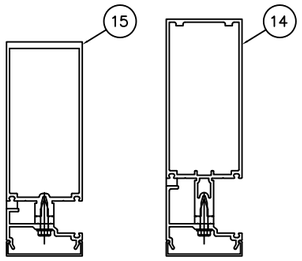

JAMB MULLION J1

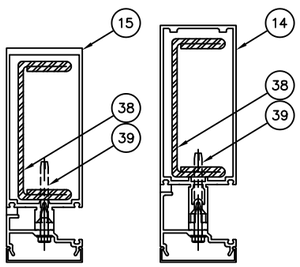

JAMB MULLION J2

FREE JAMB MULLION CHART			
MAX. DESIGN PRESSURE (psf)			
		JAMB J1	
		1/2" MIN. CAULK JOINT WIDTH	
HEIGHT (in)	WIDTH (in)	(+)	(-)
72	60	**100**	**130**
	72	84.7	110.1
	84	72.6	94.4
	96	63.2	82.2
84	54	98	122
	60	98	122
	72	81.7	101.7
	84	70	87.1
	96	61	76.2
96	54	96	114
	60	96	114
	72	80	95
	84	68.6	81.4
	96	60	71.2
114	36	93	102
	48	93	102
	61	93	102
	72	78.8	86.4
	85	66.7	73.2
123	56 3/8	91.5	91.5
	60	86	86
	66	78.2	78.2
	72	71.7	71.7
	81	63.7	63.7

FREE JAMB MULLION CHART							
		MAX. DESIGN PRESSURE (psf)					
		JAMB J1				JAMB J2	
		1/2" MIN. CAULK JOINT WIDTH		3/4" MIN. CAULK JOINT WIDTH		1/2" MIN. CAULK JOINT WIDTH	
HEIGHT (in)	WIDTH (in)	(+)	(-)	(+)	(-)	(+)	(-)
132	48	78.1	78.1	90	90	90	90
	54	69.4	69.4	90	90	90	90
	60	62.5	62.5	**90**	**90**	90	90
	66	56.8	56.8	81.8	81.8	81.8	81.8
	72	52.1	52.1	75	75	75	75
	76	49.3	49.3	71	71	71	71
147	36	67.5	67.5	77.5	77.5	77.5	77.5
	48	50.6	50.6	76.2	76.2	77.5	77.5
	60	40.5	40.5	60.9	60.9	77.5	77.5
	66	36.8	36.8	76.2	76.2	71.2	71.2
	68 1/2	35.5	35.5	53.4	53.4	68.6	68.6
156	36	52	52	70	70	70	70
	42	45	45	67.5	67.5	70	70
	48	39.7	39.7	59.5	59.5	70	70
	54	35.5	35.5	53.1	53.1	70	70
	60	31.9	31.9	48	48	69.5	69.5
	64 1/2	29.7	29.7	44.8	44.8	64.7	64.7
168	36	38.6	38.6	58	58	70	70
	42	33.5	33.5	50.2	50.2	70	70
	48	29.4	29.4	44.2	44.2	70	70
	54	26	26	38.8	38.8	66.7	66.7
	60	23.7	23.7	35.7	35.7	60	60
180	36	31.7	31.7	47.6	47.6	70	70
	42	27.2	27.2	40.8	40.8	69.6	69.6
	46 1/2	24.5	24.5	36.8	36.8	62.8	62.8
	52	22	22	32.9	32.9	56.2	56.2
	56	20.4	20.4	30.6	30.6	52.2	52.2
195	36	-	-	34.7	34.7	51.3	51.3
	43	-	-	28.8	28.8	**43**	**43**
	48	-	-	25.8	25.8	38.5	38.5
	51 1/2	-	-	24.1	24.1	35.9	35.9
204	36	-	-	-	-	44.8	44.8
	41	-	-	-	-	39.4	39.4
	45	-	-	-	-	35.9	35.9
	49 1/4	-	-	-	-	32.8	32.8
216	36	-	-	-	-	20.9	20.9
	38 3/4	-	-	-	-	19.4	19.4
	42	-	-	-	-	17.9	17.9
	46 1/2	-	-	-	-	29.2	29.2

FREE JAMB MULLION NOTES:

1. SHADED VALUES ARE APPROVED FOR USE OUTSIDE OF THE HVHZ ONLY.
2. JAMB MULLIONS THAT DO NOT MEET THE REQUIREMENTS ABOVE MUST BE ANCHORED TO THE STRUCTURE PER DETAIL 11/8 AND THE JAMB ANCHOR CHARTS ON SHEET 38.
3. FREE JAMB MULLION DEFLECTION AND CAULK JOINT PERIMETER SEALANT MUST MEET THE REQUIREMENTS OF ASTM C1472.
4. STEEL REINFORCING LENGTH IS SPAN LENGTH MINUS 24".

SSG MULLION PRESSURE CHART									
		MAX. DESIGN PRESSURE (psf)							
		MULLION M6		MULLION M7		MULLION M8		MULLION M9	
HEIGHT (in)	WIDTH (in)	(+)	(-)	(+)	(-)	(+)	(-)	(+)	(-)
106	60	**60**	**60**	60	60	60	60	60	74
	76	-	-	60	60	60	60	60	74
	87 1/2	-	-	52	52	60	60	60	74
	96	-	-	-	-	60	60	60	74
120	41	60	60	60	60	60	60	60	74
	48	51.7	51.7	60	60	60	60	60	74
	53	46.8	46.8	60	60	60	60	60	74
	67	-	-	60	60	60	60	60	74
	77 1/2	-	-	52	52	60	60	60	74
	84	-	-	-	-	60	60	60	74
	91	-	-	-	-	-	-	60	74
	96	-	-	-	-	-	-	60	70.5
132	36	51.8	51.8	60	60	60	60	74	74
	42	44.4	44.4	60	60	60	60	74	74
	48	38.8	38.8	60	60	60	60	74	74
	61	-	-	60	60	60	60	74	74
	70	-	-	52	52	60	60	74	74
	76	-	-	-	-	60	60	74	74
	83	-	-	-	-	-	-	60	74
	96	-	-	-	-	-	-	60	64
144	36	39.9	39.9	60	60	60	60	60	74
	44	32.6	32.6	60	60	60	60	60	74
	56	-	-	60	60	60	60	60	74
	60	-	-	60	60	60	60	60	74
	64 1/2	-	-	52	52	60	60	60	74
	70	-	-	-	-	60	60	60	74
	76	-	-	-	-	-	-	60	74
	91	-	-	-	-	-	-	58	62
156	48	-	-	60	60	60	60	60	74
	54	-	-	56.7	56.7	60	60	60	74
	59 1/2	-	-	51.4	51.4	60	60	60	74
	64 1/2	-	-	-	-	60	60	60	74
	70	-	-	-	-	-	-	60	74
	78	-	-	-	-	-	-	60	66.7
	84	-	-	-	-	-	-	**58**	**62**
168	40 1/2	-	-	60	60	60	60	60	74
	48	-	-	51	51	60	60	60	74
	55	-	-	44.5	44.5	60	60	60	74
	60	-	-	-	-	**60**	**60**	60	69.5
	66	-	-	-	-	-	-	59.1	63.2
	72	-	-	-	-	-	-	54.2	57.9
	78	-	-	-	-	-	-	50	53.4
180	33	-	-	60	60	60	60	60	74
	36	-	-	55.3	55.3	60	60	60	74
	42	-	-	47.4	47.4	60	60	60	74
	51 1/2	-	-	38.7	38.7	56.8	56.8	60	65.8
	56	-	-	-	-	52.2	52.2	56.6	60.5
	60	-	-	-	-	-	-	52.8	56.5
	66	-	-	-	-	-	-	48	51.3
	72 1/2	-	-	-	-	-	-	43.7	46.7
192	36	-	-	45.6	45.6	60	60	60	74
	42	-	-	39.1	39.1	57.4	57.4	60	66.5
	48	-	-	34.2	34.2	50.2	50.2	54.4	58
	52 1/2	-	-	-	-	45.9	45.9	49.8	53.2
	60	-	-	-	-	-	-	43.5	46.5
	68	-	-	-	-	-	-	38.4	41.1
204	36	-	-	38	38	55.8	55.8	60.5	64.7
	42	-	-	32.6	32.6	47.8	47.8	51.8	55.4
	45 1/2	-	-	30.1	30.1	44.2	44.2	47.9	51.2
	49	-	-	-	-	41	41	44.4	47.5
	56	-	-	-	-	-	-	38.9	41.6
	64	-	-	-	-	-	-	34	36.4
216	36	-	-	-	-	47	47	51	54.5
	42	-	-	-	-	40.3	40.3	43.7	46.7
	46 1/2	-	-	-	-	36.4	36.4	39.4	42.2
	54	-	-	-	-	-	-	34	36.3
	60	-	-	-	-	-	-	30.6	32.7

SHADED VALUES ARE APPROVED FOR USE OUTSIDE OF THE HVHZ ONLY

SSG MULLIONS

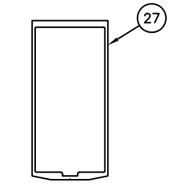

MULLION M6

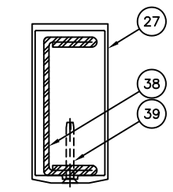

MULLION M7

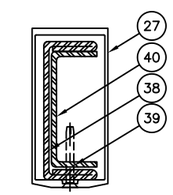

MULLION M8

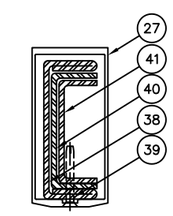

MULLION M9

REV.#	DATE	REVISION
–	12/16/24	2023 CODE UPDATE
–	10/15/23	1ST SUBMITTAL
–	10/12/20	PRINTS ISSUED FOR

KAWNEER
AN ARCONIC COMPANY

555 GUTHRIDGE COURT
NORCROSS, GA 30092

PH: (770) 449-5555
WWW.KAWNEER.COM

SEAL:

SCOTT WOLTERS LICENSE No 62354 STATE OF FLORIDA PROFESSIONAL ENGINEER
AUG 17, 2026

SCOTT WOLTERS
FL PE# 62354

WOLTERS ENGINEERING
(COA# 27194)
15211 97TH ROAD N
WEST PALM BEACH, FL 33412
(561) 225-1982

PRODUCT: 1600 WALL SYSTEM 1 & 2

DWG: 1600-IR-HVHZ

SECTION: 4

SHEET: 15/42

MULTI-SPAN MULLION LIMITATIONS

WALL SECTION 1:

SPLICE JOINTS NEAR
MID-SPAN ANCHORS

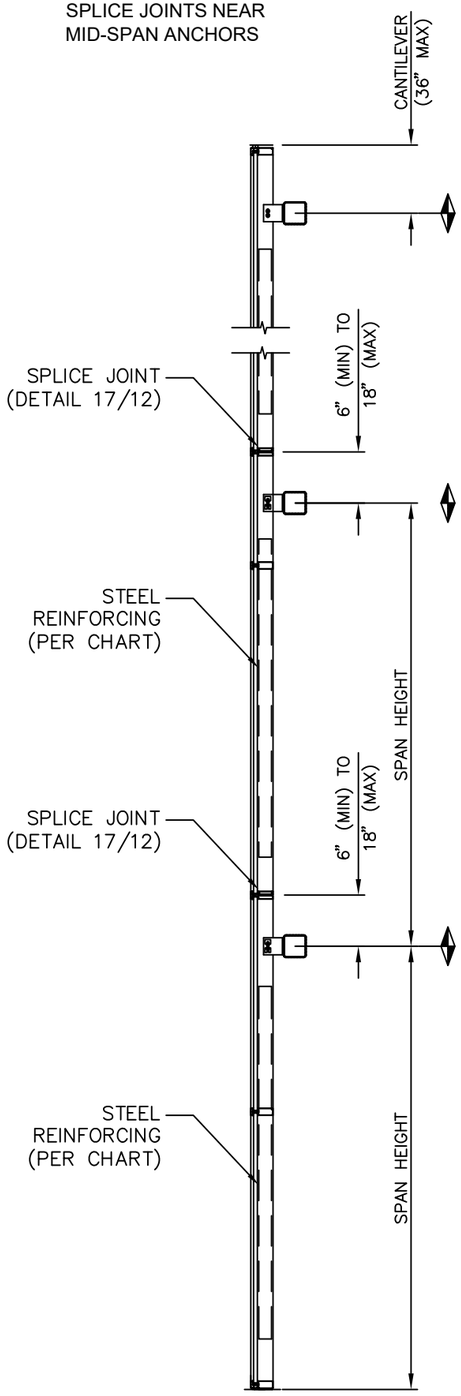

MULTI-SPAN MULLION CHART - WALL SECTION 1

		MAX. DESIGN PRESSURE (psf)										
		JAMB MULLION		CAPTURED MULLIONS			SSG MULLIONS					
HEIGHT	WIDTH	J1	J2	M1	M2	M3	M6		M7		M8	
(in)	(in)	(+/-)	(+/-)	(+/-)	(+/-)	(+/-)	(+)	(-)	(+)	(-)	(+)	(-)
114	54	90	90	90	90	90	60	66.3	60	74	60	74
	62	90	90	86.1	86.1	86.1	57.8	57.8	60	74	60	74
	66	-	90	-	80.9	80.9	-	-	60	74	60	74
	72	-	90	-	74.2	74.2	-	-	60	74	60	74
	78	-	85.6	-	68.5	68.5	-	-	60	68.5	60	68.5
	84	-	79.5	-	63.6	63.6	-	-	60	63.6	60	63.6
	96	-	69.6	-	55.6	55.6	-	-	55.6	55.6	55.6	55.6
118	48	90	90	90	90	90	60	69.3	60	74	60	74
	54	90	90	80	90	90	60	61.6	60	74	60	74
	60	90	90	72	86.4	86.4	55.4	55.4	60	74	60	74
	66	-	90	-	78.5	78.5	-	-	60	74	60	74
	72	-	89.6	-	72	72	-	-	60	72	60	72
	78	-	82.7	-	66.4	66.4	-	-	60	66.4	60	66.4
	84	-	76.8	-	61.7	61.7			60	61.7	60	61.7
	94	-	68.6	-	55.1	55.1	-	-	55.1	55.1	55.1	55.1
132	48	90	90	73.6	90	90	51.4	51.4	60	74	60	74
	52 1/2	90	90	67.3	88.6	88.6	47	47	60	74	60	74
	60	-	90	-	77.5	77.5	-	-	60	65.5	60	74
	72	-	80.8	-	64.6	64.6	-	-	54.6	54.6	60	64.6
	78	-	74.6	-	59.6	59.6	-	-	50.4	50.4	59.6	59.6
	84	-	69.2	-	-	55.4	-	-	-	-	55.4	55.6
144	48	90	90	56.7	89.1	89.1	39	39	60	74	60	74
	54	-	90	-	79.2	79.2	-	-	60	74	60	74
	60	-	83	-	71.3	71.3	-	-	60	71.3	60	71.3
	70	-	71.2	-	61.1	61.1	-	-	60	60	60	61.1
	77 1/2	-	64.3	-	-	55.2	-	-	-	-	55.2	55.2
156	54	-	78.4	-	73	73	-	-	60	68.6	60	68.6
	60	-	70.5	-	65.7	65.7	-	-	60	61.8	60	61.8
	64 1/2	-	65.6	-	61.2	61.2	-	-	57.5	57.5	57.5	57.5
	71 3/4	-	59	-	-	55	-	-	-	-	51.7	51.7
168	42	-	86.4	-	84.5	87.4	-	-	60	74	60	74
	48	-	75.6	-	73.9	76.5	-	-	60	66.3	60	66.3
	54	-	67.2	-	65.7	68	-	-	58.9	58.9	58.9	58.9
	60	-	60.5	-	59.1	61.2	-	-	53	53	53	53
	66 5/8	-	54.4	-	-	55.1	-	-	-	-	47.7	47.7
180	42	-	74.7	-	72	81.6	-	-	60	65.5	60	65.5
	48	-	65.4	-	63	71.4	-	-	57.4	57.4	57.4	57.4
	56	-	56	-	54	61.2	-	-	49.2	49.2	49.2	49.2
	64	-	49	-	-	53.5	-	-	-	-	43.1	43.1
192	36	-	76.4	-	67.2	84	-	-	60	64	60	67
	42	-	65.5	-	57.6	72	-	-	54.8	54.8	57.4	57.4
	48	-	57.3	-	50.4	63	-	-	48	48	50.2	50.2
	52 1/2	-	52.4	-	46.1	57.6	-	-	43.9	43.9	45.9	45.9
	60	-	45.8	-	-	50.4	-	-	-	-	40.2	40.2
204	36	-	67.6	-	56	69.2	-	-	53.2	53.2	59.4	59.4
	42	-	57.9	-	48	59.3	-	-	45.6	45.6	50.9	50.9
	49 1/4	-	49.4	-	40.9	50.6	-	-	38.9	38.9	43.4	43.4
	56 1/2	-	43.1	-	-	44.1	-	-	-	-	37.8	37.8
216	36	-	60	-	46.8	58.8	-	-	44.6	44.6	52.4	52.4
	42	-	51.4	-	40.1	50.4	-	-	38.2	38.2	44.9	44.9
	46 1/2	-	46.4	-	36.2	45.5	-	-	34.5	34.5	40.5	40.5
	53 3/8	-	40.4	-	-	39.6	-	-	-	-	35.3	35.3

WALL SECTION 1 NOTES:

1. SHADED VALUES ARE APPROVED FOR USE OUTSIDE OF THE HVHZ ONLY.
2. SPLICE JOINTS ARE LOCATED NEAR (6" to 18") EACH MID-SPAN ANCHOR.
3. VALUES IN CHART ARE FOR EQUAL SPANS. FOR UNEQUAL SPANS, SEE THE MULTI-SPAN REQUIREMENTS ON SHEET 20.
4. FOR MULLIONS WITH NO SPLICE JOINTS, SPLICE JOINTS FARTHER FROM ANCHOR POINTS, OR MULLIONS THAT EXCEED THE DIMENSIONS LISTED, SEE EITHER THE WALL SECTIONS ON SHEETS 17, 18, OR THE MULTI-SPAN NOTES ON SHEET 20.
5. STEEL REINFORCING LENGTH IS SPAN LENGTH MINUS 24", OR DISTANCE FROM SPLICE TO ANCHOR MINUS 24".
6. THE VALUES IN THE CHART ARE SHOWN FOR CONVENIENCE. ALL MULLIONS MUST MEET THE MULTI-SPAN MULLION REQUIREMENTS LISTED ON SHEET 20.

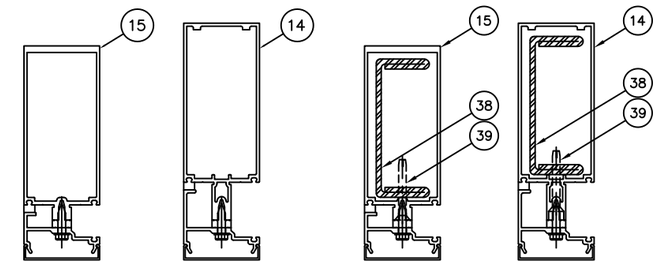

JAMB MULLION J1 JAMB MULLION J2

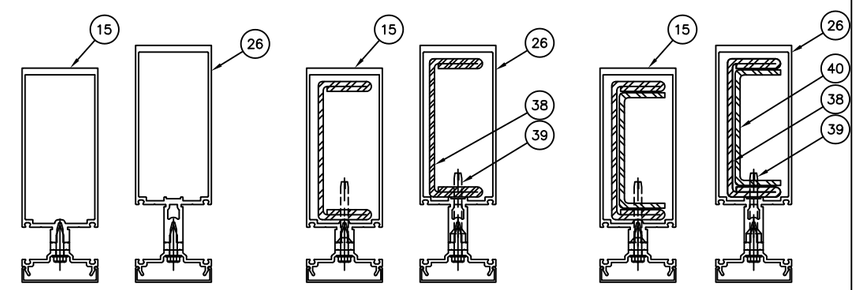

MULLION M1 MULLION M2 MULLION M3

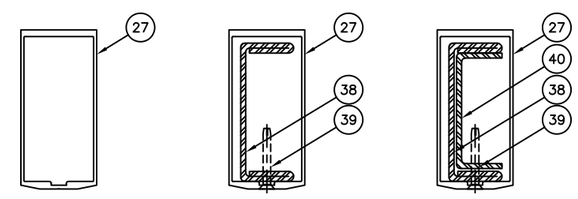

MULLION M6 MULLION M7 MULLION M8

REV.#	DATE	REVISION
–	12/16/24	REVISION
–	2/19/24	REVISION
–	10/15/23	2023 CODE UPDATE
–	10/12/20	1ST SUBMITTAL
–		PRINTS ISSUED FOR

KAWNEER
AN ARCONIC COMPANY
555 GUTHRIDGE COURT
NORCROSS, GA 30092
PH: (770) 449-5555
WWW.KAWNEER.COM

SEAL:

SCOTT WOLTERS
FL PE# 62354

WOLTERS ENGINEERING
(COA# 27194)
15211 97TH ROAD N
WEST PALM BEACH, FL 33412
(561) 225-1982

PRODUCT: 1600 WALL SYSTEM 1 & 2

DWG: 1600-IR-HVHZ

SECTION: 4

SHEET: 16/42

MULTI-SPAN MULLION LIMITATIONS

WALL SECTION 2:

NO SPLICE JOINTS, OR SPLICE JOINTS AT INFLECTION POINTS

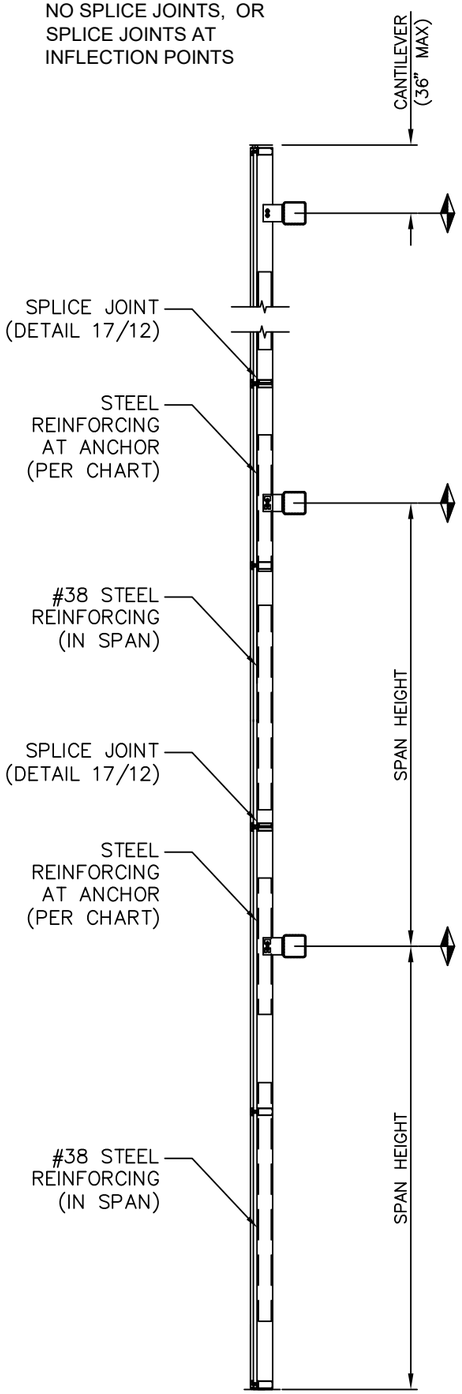

MULTI-SPAN MULLION CHART - WALL SECTION 2

		MAX. DESIGN PRESSURE (PSF)							
		JAMB MULLION	CAPTURED MULLIONS			SSG MULLION			
HEIGHT (in)	WIDTH (in)	J2 (+/-)	M2 (+/-)	M3 (+/-)	M4 (+/-)	M7 (+)	M7 (-)	M8 (+)	M8 (-)
120	54	90	90	90	90	60	74	60	74
	60	90	89.9	90	90	60	74	60	74
	72	79.2	74.9	90	90	60	74	60	74
	84	67.9	64.2	81	90	60	74	60	74
	96	59.4	-	-	90	-	-	60	60
132	54	90	90	90	90	60	74	60	74
	60	86	81.4	90	90	60	74	60	74
	68	75.8	71.8	90	90	60	74	60	74
	76	67.9	64.3	81	90	60	74	60	74
	87	59.3	-	-	90	-	-	60	60
144	54	87.8	83.2	90	90	60	74	60	74
	60	79	74.9	90	90	60	70	60	74
	70	67.8	64.2	80.6	90	60	60	60	68.6
	80	59.3	-	-	90	-	-	60	60
156	48	90	86.4	90	90	60	74	60	74
	54	80.5	76.8	90	90	60	71.6	60	74
	60	72.5	69.1	86.9	90	60	64.5	60	69.6
	64 1/2	67.4	64.3	80.8	90	60	60	60	64.7
	73 1/2	59.2	-	-	90	-	-	56.8	56.8
168	42	90	90	90	90	60	74	60	74
	48	84.6	80.1	90	90	60	74	60	74
	54	75.2	71.2	89.6	90	60	66.7	60	74
	60	67.7	64.1	80.6	90	60	60	60	66.9
	68 5/8	59.2	-	-	90	-	-	58.5	58.5
180	42	89.6	85.6	90	90	60	74	60	74
	48	78.4	74.9	90	90	60	65.7	60	65.7
	56	66.8	64.2	80.7	90	56.3	56.3	56.3	56.3
	64	58.8	-	-	83.7	-	-	49.3	49.3
192	36	90	90	90	90	60	74	60	74
	42	78.5	80.2	90	90	60	66	60	66
	48	68.7	70.2	88.2	90	57.7	57.7	57.7	57.7
	52 1/2	62.8	64.2	80.6	89.8	52.8	52.8	52.8	52.8
	60	55	-	-	78.6	-	-	46.2	46.2
204	36	80.8	88	90	90	60	68.2	60	68.2
	42	69.2	75.4	90	90	58.4	58.4	58.4	58.4
	49 1/4	59	64.3	79.5	84.5	49.8	49.8	49.8	49.8
	56 1/2	51.5	-	-	73.5	-	-	43.4	43.4
216	36	70.8	78.4	90	90	60	62.4	60	62.4
	42	60.7	67.2	85	85.7	53.5	53.5	53.5	53.5
	46 1/2	54.8	60.7	76.8	77.4	48.3	48.3	48.3	48.3
	53 3/8	47.7	-	-	67.4	-	-	42.1	42.1

WALL SECTION 2 NOTES:

1. SHADED VALUES ARE APPROVED FOR USE OUTSIDE OF THE HVHZ ONLY.
2. SPLICE JOINTS, IF REQUIRED, ARE LOCATED AT BENDING MOMENT INFLECTION POINTS.
3. LENGTH OF #38 STEEL REINFORCING IN SPAN = (SPAN LENGTH)/1.75
4. STEEL REINFORCING IN SPAN IS CENTERED BETWEEN STEEL AT MID-SPAN ANCHORS, BETWEEN STEEL AT MID-SPAN ANCHOR AND SPLICE JOINT, OR BETWEEN MID-SPAN ANCHOR AND HEAD/SILL.
5. LENGTH OF STEEL REINFORCING AT MID-SPAN ANCHORS = (SPAN LENGTH)/2.8.
6. VALUES IN CHART ARE FOR MULLIONS WITH EQUAL SPANS. FOR MULLIONS WITH UNEQUAL SPANS, SEE THE MULTI-SPAN REQUIREMENTS ON SHEET 20.
7. THE VALUES IN THE CHART ARE SHOWN FOR CONVIENCE. ALL MULLIONS MUST MEET THE MULTI-SPAN MULLION REQUIREMENTS LISTED ON SHEET 20.

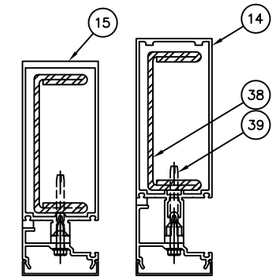

JAMB MULLION J2

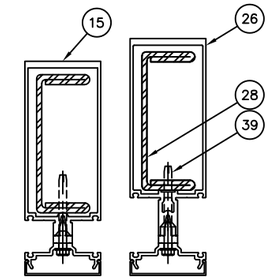

MULLION M2

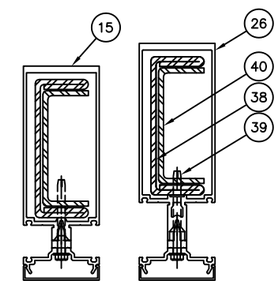

AT ANCHOR

MULLION M3
(#38 STEEL REINF IN SPAN)

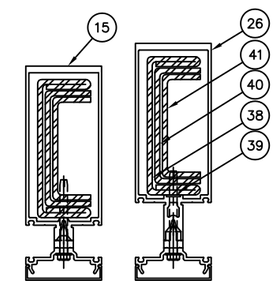

AT ANCHOR

MULLION M4
(#38 STEEL REINF IN SPAN)

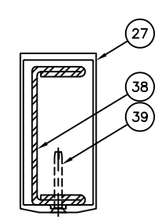

MULLION M7

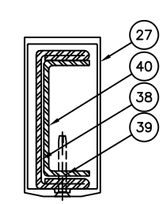

AT ANCHOR

MULLION M8
(#38 STEEL REINF IN SPAN)

REV.#	DATE	REVISION
-	12/16/24	2023 CODE UPDATE
-	10/15/23	1ST SUBMITTAL
-	10/12/20	PRINTS ISSUED FOR

KAWNEER
AN ARCONIC COMPANY
555 GUTHRIDGE COURT
NORCROSS, GA 30092
PH: (770) 449-5555
WWW.KAWNEER.COM

SEAL:

SCOTT WOLTERS
FL PE# 62354

WOLTERS ENGINEERING
(COA# 27194)
15211 97TH ROAD N
WEST PALM BEACH, FL 33412
(561) 225-1982

PRODUCT: 1600 WALL SYSTEM 1 & 2

DWG: 1600-IR-HVHZ

SECTION: 4

SHEET: 17/42

MULTI-SPAN MULLION LIMITATIONS

WALL SECTION 3:

NO SPLICE JOINTS, OR
SPLICE JOINTS AT
INFLECTION POINTS

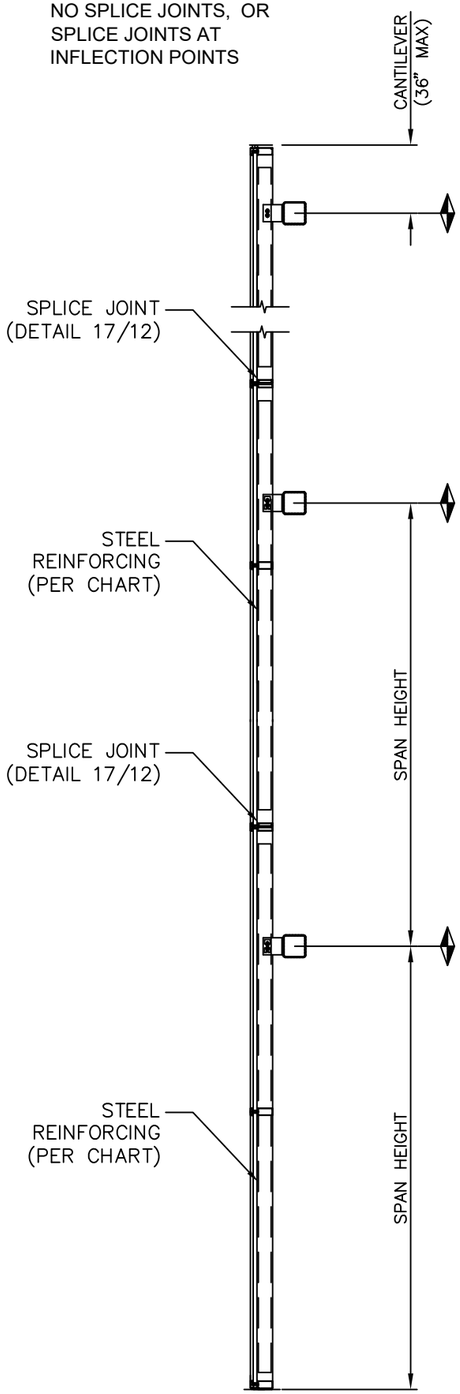

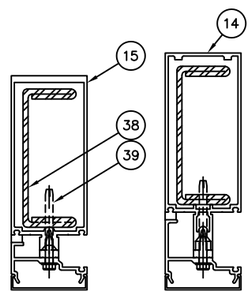

JAMB MULLION J2

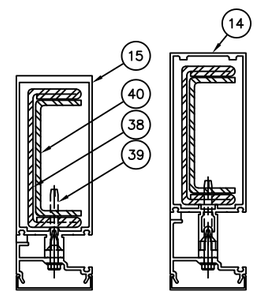

JAMB MULLION J3

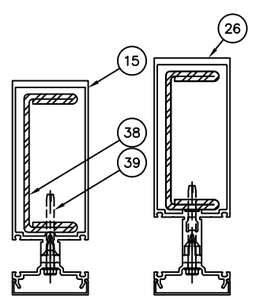

MULLION M2

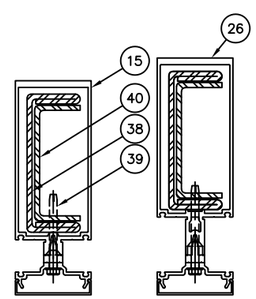

MULLION M3

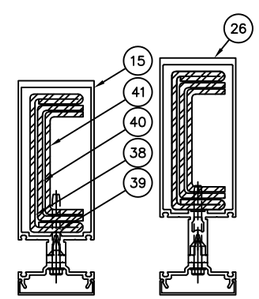

MULLION M4

MULTI-SPAN MULLION CHART - WALL SECTION 3

		MAX. DESIGN PRESSURE (PSF)					
		JAMB MULLION		CAPTURED MULLION			
HEIGHT (in)	WIDTH (in)	J2 (+/-)	J3 (+/-)	M2 (+/-)	M3 (+/-)	M4 (+)	M4 (-)
144	62	71	71	71	71	71	90
	66	-	71	68.3	71	71	90
	73	-	65.1	61.7	71	71	90
	77	-	61.7	58.5	71	71	90
	84	-	-	53.6	67.9	71	86.7
	92	-	-	-	62	71	79.2
	96	-	-	-	-	71	75.9
156	57 1/2	71	71	71	71	71	90
	60	-	71	69.4	71	71	90
	67	-	65.3	62.1	71	71	90
	71	-	61.6	58.6	71	71	90
	78	-	-	53.3	67.6	71	86.3
	85	-	-	-	62	71	79.2
	90	-	-	-	-	71	74.8
	96	-	-	-	-	70.1	70.1
168	53	71	71	71	71	71	90
	62 1/2	-	64.9	62	71	71	90
	66	-	61.5	58.7	71	71	90
	72	-	-	53.8	68	71	86.8
	79	-	-	-	62	71	79.1
	84	-	-	-	-	71	74.4
	90	-	-	-	-	69.4	69.4
	96	-	-	-	-	65.1	65.1
180	49 1/2	71	71	71	71	71	90
	58	-	65.5	62.3	71	71	90
	61	-	62.3	59.2	71	71	90
	68	-	-	53.1	67.1	71	85.8
	74	-	-	-	61.7	71	78.1
	80	-	-	-	-	71	72.9
	89	-	-	-	-	65.5	65.5
187	48	71	71	71	71	71	90
	54	-	67.2	64	71	71	90
	56	-	64.8	61.7	71	71	90
	59	-	61.5	58.5	71	71	90
	66	-	-	52.3	66.5	71	85.1
	71	-	-	-	61.8	71	79.1
	78	-	-	-	-	71	72
	86	-	-	-	-	65.3	65.3
192	48	-	71	70.5	71	71	90
	54	-	65.6	62.6	71	71	90
	57 1/2	-	61.6	-	71	71	90
	69	-	-	-	62	71	79.3
	72	-	-	-	-	71	76
	78	-	-	-	-	70.1	70.1
	84	-	-	-	-	65.1	65.1
204	42	-	71	71	71	71	71
	48	-	69.6	63.4	71	71	71
	51 1/2	-	64.8	59.1	71	71	71
	54	-	61.8	-	71	71	71
	60	-	-	-	67.2	71	71
	65	-	-	-	62	71	71
	72	-	-	-	-	67.8	67.8
	79	-	-	-	-	61.8	61.8
216	36	-	71	71	71	71	71
	42	-	71	68.2	71	71	71
	48	-	63	59.7	71	71	71
	51	-	59.3	-	71	71	71
	61	-	-	-	59.7	71	71
	68	-	-	-	-	65	65
	74	-	-	-	-	59.7	59.7
231	36	-	71	70	71	71	71
	42	-	62.7	60	71	71	71
	45 1/2	-	57.6	55	69.9	71	71
	48	-	54.6	-	66.3	71	71
	57 3/4	-	-	-	55.1	66.5	66.5
	66	-	-	-	-	58.2	58.2
	70	-	-	-	-	54.9	54.9

WALL SECTION 3 NOTES:

1. SPLICE JOINTS, IF REQUIRED, ARE LOCATED AT BENDING MOMENT INFLECTION POINTS.
2. VALUES IN CHART ARE FOR EQUAL SPANS. FOR UNEQUAL SPANS, SEE THE MULTI-SPAN LIMITATIONS ON SHEET 20.
3. STEEL REINFORCING LENGTH = MULLION LENGTH – 24".
4. THE VALUES IN THE CHART ARE SHOWN FOR CONVENIENCE. ALL MULLIONS MUST MEET THE MULTI-SPAN MULLION REQUIREMENTS LISTED ON SHEET 20.

REV.#	DATE	REVISION
–	12/16/24	–
–	10/15/23	2023 CODE UPDATE
–	10/12/20	1ST SUBMITTAL
–	–	PRINTS ISSUED FOR

KAWNEER
AN ARCONIC COMPANY
555 GUTHRIDGE COURT
NORCROSS, GA 30092
PH: (770) 449-5555
WWW.KAWNEER.COM

SEAL:

SCOTT WOLTERS LICENSE No 62354 STATE OF FLORIDA PROFESSIONAL ENGINEER
AUG 17, 2026

SCOTT WOLTERS
FL PE# 62354

WOLTERS ENGINEERING
(COA# 27194)
15211 97TH ROAD N
WEST PALM BEACH, FL 33412
(561) 225-1982

PRODUCT: 1600 WALL SYSTEM 1 & 2

DWG: 1600-IR-HVHZ

SECTION: 4

SHEET: 18/42

CORNER MULLION LIMITATIONS

SINGLE AND MULTI-SPAN MULLIONS.

SINGLE SPAN CORNER MULLION CHART

		MAX. DESIGN PRESSURE (psf)		
		CORNER MULLIONS		
HEIGHT (in)	WIDTH (in)	C3 (+/-)	C4 (+/-)	C7 (+/-)
110	48	74	90	74
	54	68.3	90	68.3
	61 3/4	60	90	60
	63 1/4	-	90	-
	72	-	74	-
	85	-	74	-
120	42	62.4	90	62.4
	48	55	90	55
	52	50.9	90	50.9
	56 1/2	46.7	90	46.7
	63 1/4	-	90	-
	67 1/2	-	74	-
	77 1/2	-	74	-
132	36	58.1	90	58.1
	42	50.3	90	50.3
	48	44.2	90	44.2
	51	41.6	90	41.6
	63 1/4	-	90	-
	70 1/2	-	74	-
147	36	42.1	90	42.1
	42	36.4	90	36.4
	45 1/2	33.6	90	33.6
	54	-	90	-
	63 1/4	-	90	-
156	36	35.2	90	35.2
	42	30.4	90	30.4
	48	-	90	-
	54	-	87.6	-
	59 1/4	-	80	-
168	36	-	90	-
	42	-	89.2	-
	48	-	78.5	-
	55	-	68.8	-

MULTI-SPAN CORNER MULLION CHART

		MAX. DESIGN PRESSURE (PSF)								
		CAPTURED MULLIONS				SSG MULLIONS				
HEIGHT (in)	WIDTH (in)	C1 (+/-)	C2 (+/-)	C3 (+/-)	C4 (+/-)	C5 (+/-)	C6 (+)	C6 (-)	C7 (+)	C7 (-)
114	64	60	74	74	90	60	60	74	60	74
	66	60	74	74	90	60	60	74	60	74
	71 1/4	-	74	74	90	-	60	74	60	74
	78 3/4	-	67.1	74	90	-	60	67.1	60	74
	84	-	-	74	90	-	-	-	60	74
118	63 1/4	60	74	74	90	60	60	74	60	74
	72	-	71.3	74	90	-	60	71.3	60	74
	76	-	67.6	74	90	-	60	67.6	60	74
	84	-	-	60	90	-	-	-	60	60
132	48	60	74	74	90	60	60	74	60	74
	56	53.7	73.3	74	90	53.7	60	73.3	60	74
	67 1/2	-	61	74	90	-	60	61	60	74
	81	-	-	60	90	-	-	-	60	60
144	42	59.4	74	74	90	59.4	60	74	60	74
	45 1/2	55	74	74	90	55	60	74	60	74
	51 1/4	49	68	74	90	49	60	68	60	74
	62	-	56.8	74	90	-	56.8	56.8	60	74
	74	-	-	60	90	-	-	-	60	60
156	36	55.6	74	74	90	55.6	60	74	60	74
	42	50.7	69.6	74	90	50.7	60	69.6	60	74
	47 1/4	45.2	62.1	74	90	45.2	60	62.1	60	74
	57	-	51.9	74	90	-	51.9	51.9	60	74
	68	-	-	60	90	-	-	-	60	60
168	36	50.1	70.4	74	90	50.1	60	70.4	60	74
	43 3/4	41.6	58.8	74	90	41.6	58.8	58.8	60	74
	48	-	53.5	74	90	-	53.5	53.5	60	74
	52 3/4	-	48.9	71.4	90	-	48.9	48.9	60	71.4
	63 1/4	-	-	60	90	-	-	-	60	60
180	36	44	61	60	90	44	60	61	60	74
	40 1/2	39.3	54.5	60	90	39.3	54.5	54.5	60	74
	49	-	45.5	60	90	-	45.5	45.5	60	70.3
	54	-	-	60	89.8	-	-	-	60	60
	58 3/4	-	-	59.1	82.8	-	-	-	59.1	59.1
192	36	38.9	53.3	60	90	38.9	53.3	53.3	60	74
	38	37	50.7	60	90	37	50.7	50.7	60	74
	42	-	46.1	60	90	-	46.1	46.1	60	72.3
	45 3/4	-	42.3	60	90	-	42.3	42.3	60	66.5
	48	-	-	60	87.6	-	-	-	60	60
	55	-	-	55.8	76.8	-	-	-	55.8	55.8
204	36	-	47.4	60	90	-	47.4	47.4	60	60
	43	-	40	60	84.5	-	40	40	60	63.9
	48	-	-	57.6	76.2	-	-	-	57.6	57.6
	51 1/2	-	-	53.8	71.2	-	-	-	53.8	53.8
216	36	-	42.4	60	90	-	42.4	42.4	60	66.4
	40 1/2	-	37.8	59.2	80.9	-	37.8	37.8	59.2	59.2
	42	-	-	57.3	78.3	-	-	-	57.3	57.3
	48 1/2	-	-	49.8	68	-	-	-	49.8	49.8

MULTI–SPAN CORNER NOTES:

1. SHADED VALUES ARE APPROVED FOR USE OUTSIDE OF THE HVHZ ONLY.
2. SIZES AND PRESSURES LISTED ARE FOR MULLIONS WITH EQUAL SPANS. FOR MULLIONS WITH UNEQUAL SPANS, SEE THE MULTI–SPAN MULLION LIMITATIONS LISTED ON SHEET 20.
3. WIDTHS AT CORNER MULLIONS WITH HORIZONTAL SPLICES ARE LIMITED TO 64" MAX.
4. THE VALUES IN THE CHART ARE SHOWN FOR CONVENIENCE. ALL MULLIONS MUST MEET THE MULTI–SPAN MULLION REQUIREMENTS LISTED ON SHEET 20.

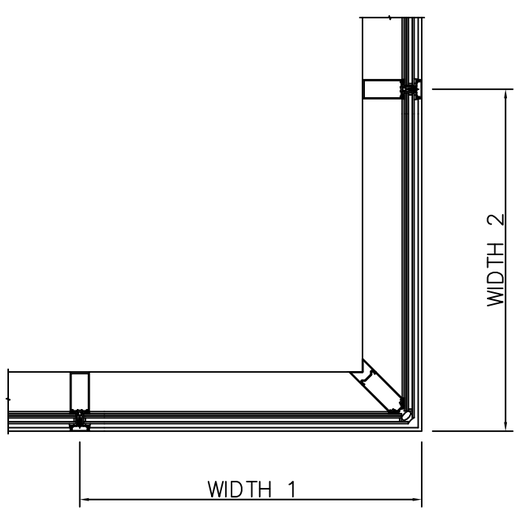

CORNER MULLION SPACING = $\frac{\text{WIDTH 1} + \text{WIDTH 2}}{2}$

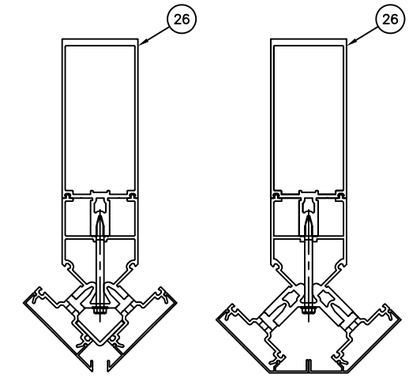

CORNER MULLION C1

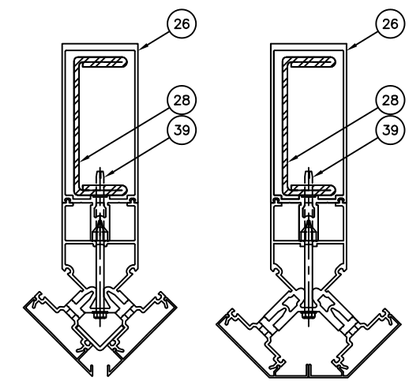

CORNER MULLION C2

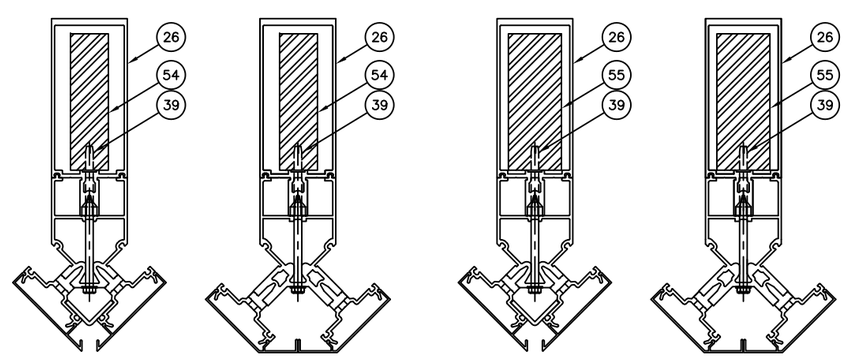

CORNER MULLION C3 CORNER MULLION C4

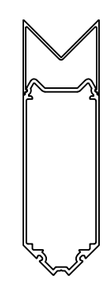

CORNER MULLION C5

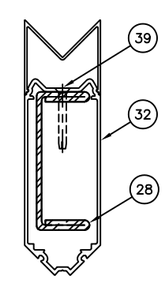

CORNER MULLION C6

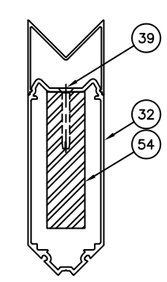

CORNER MULLION C7

REV.#	DATE	REVISION
–	12/16/24	2023 CODE UPDATE
–	10/15/23	1ST SUBMITTAL
–	10/12/20	PRINTS ISSUED FOR

KAWNEER
AN ARCONIC COMPANY
555 GUTHRIDGE COURT
NORCROSS, GA 30092
PH: (770) 449–5555
WWW.KAWNEER.COM

SEAL:

SCOTT WOLTERS
FL PE# 62354

WOLTERS ENGINEERING
(COA# 27194)
15211 97TH ROAD N
WEST PALM BEACH, FL 33412
(561) 225–1982

PRODUCT: 1600 WALL SYSTEM 1 & 2

DWG: 1600–IR–HVHZ

SECTION: 4

SHEET: 19/42

MULTI-SPAN MULLION LIMITATIONS

ALL WALL SECTIONS:

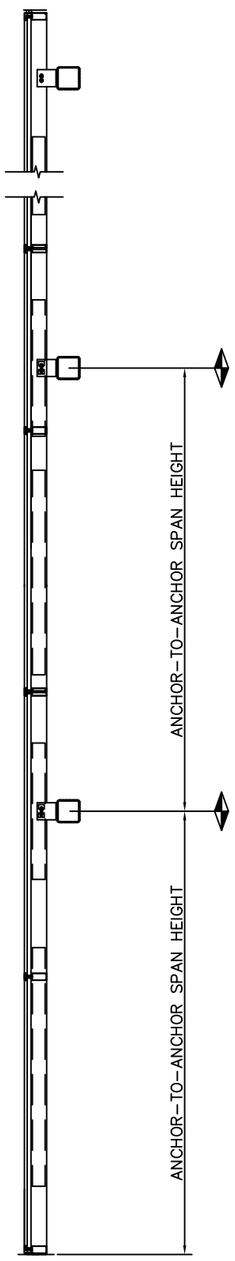

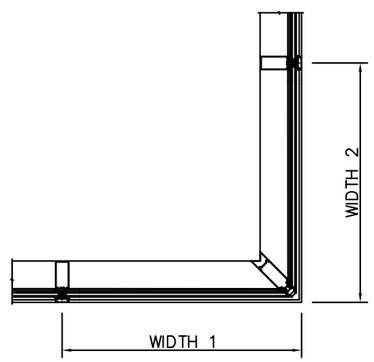

CORNER MULLION SPACING = $\frac{\text{WIDTH 1 + WIDTH 2}}{2}$

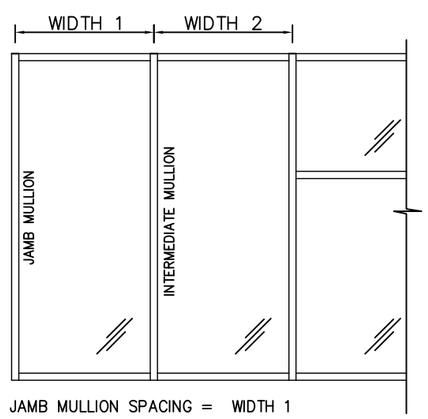

JAMB MULLION SPACING = WIDTH 1

INTERMEDIATE MULLION SPACING = $\frac{\text{WIDTH 1 + WIDTH 2}}{2}$

MULTI-SPAN MULLION LIMITATIONS

VERTICAL MULLIONS MUST MEET ALL OF THE FOLLOWING REQUIREMENTS:

CAPTURED MULLIONS WITH WINDLOADS ≤ +/- 71 psf:

1. MAX. SPAN TRIB. AREA = 112 ft^2 (SEE NOTE #1 BELOW)
2. IN THE HVHZ, MAX ANCHOR-TO-ANCHOR SPAN HEIGHT = 231 in.
3. MAX. DEFLECTION = L/180.

CAPTURED MULLIONS WITH WINDLOADS ≤ +/- 90 psf:

1. MAX. SPAN TRIB. AREA = 80 ft^2 (SEE NOTE #1 BELOW)
2. IN THE HVHZ, MAX ANCHOR-TO-ANCHOR SPAN HEIGHT = 168 in.
3. MAX. DEFLECTION = L/180.

ALL CAPTURED MULLIONS:

4. MAX. BENDING MOMENTS:
   - MID-SPAN: 60,918 in-lb (MULLION M1)
     81,184 in-lb (MULLION M2)
     100,477 in-lb (MULLION M3)
     121,716 in-lb (MULLION M4)
   - AT ANCHORS: 60,918 in-lb (MULLION M1)
     116,277 in-lb (MULLION M2)
     147,640 in-lb (MULLION M3)
     178,848 in-lb (MULLION M4)
5. MAX. WINDLOAD REACTIONS:
   - AT HEAD/SILL F/T-ANCHOR: 3367 lb.
   - AT MID-SPAN ANCHOR: 4363 lb (NO STEEL)
     5621 lb (M2 STEEL)
     7138 lb (M3 STEEL)
     9119 lb (M4 STEEL)

SSG MULLIONS:

1. MAX. WINDLOADS = +60/-74 psf.
2. MAX. SPAN TRIB. AREA = 77 ft^2 (SEE NOTE #1 BELOW)
3. IN THE HVHZ, MAX ANCHOR-TO-ANCHOR SPAN HEIGHT = 168 in (+/-60 psf)
   = 132 in (+60/-74 psf)
4. MAX. DEFLECTION = L/180.
5. MAX. BENDING MOMENTS:
   - MID-SPAN: 36,468 in-lb (MULLION M6)
     72,731 in-lb (MULLION M7)
     72,731 in-lb (MULLION M8)
   - AT ANCHORS: 38,267 in-lb (MULLION M6)
     92,687 in-lb (MULLION M7)
6. MAX. WINDLOAD REACTIONS:
   - AT HEAD/SILL F/T-ANCHOR: 3367 lb.
   - AT MID-SPAN ANCHOR: 4363 lb (NO STEEL)
     6702 lb (M7 STEEL)
     7138 lb (M8 STEEL)

MULTI-SPAN MULLION NOTES:

1. SPAN TRIB. AREA = ANCHOR-TO-ANCHOR SPAN HEIGHT x MULLION SPACING.
2. FREE JAMB MULLION DEFLECTION AND CAULK JOINT PERIMETER SEALANT MUST MEET THE REQUIREMENTS OF ASTM C1472.
3. MULLION WIDTHS AT CORNER MULLIONS WITH SPLICE HORIZONTALS ARE LIMITED TO 64" MAX.

FREE JAMB MULLIONS:

1. MAX. WINDLOADS = +/-90 psf
2. MAX. SPAN TRIB. AREA = 40.5 ft^2 (SEE NOTE #1 BELOW)
3. IN THE HVHZ, MAX ANCHOR-TO-ANCHOR SPAN HEIGHT = 168 in (+/-90 psf)
   = 231 in (+/-71 psf)
4. MAX. DEFLECTION = L/180. (SEE NOTE #2 BELOW)
5. MAX. BENDING MOMENTS:
   - MID-SPAN: 21,902 in-lb (MULLION J1)
     41,501 in-lb (MULLION J2)
     41,501 in-lb (MULLION J3)
   - AT ANCHORS: 52,812 in-lb (MULLION J1)
     52,801 in-lb (MULLION J2)
     61,342 in-lb (MULLION J3)
6. MAX. WINDLOAD REACTIONS:
   - AT HEAD/SILL F/T-ANCHOR: 1092 lb.
   - AT MID-SPAN ANCHOR: 2714 lb (NO STEEL)
     2966 lb (WITH STEEL)

JAMB MULLIONS THAT EXCEED THE VALUES LISTED ABOVE MUST BE ANCHORED TO THE STRUCTURE PER DETAIL 11/8 AND THE JAMB ANCHOR CHARTS ON SHEET 38.

CAPTURED CORNER MULLIONS:

1. MAX. WINDLOADS = +/-90 psf
2. MAX. SPAN TRIB. AREA = 73.8 ft^2 (SEE NOTE #1 BELOW)
3. IN THE HVHZ, MAX ANCHOR-TO-ANCHOR SPAN HEIGHT = 168 in.
4. MAX. DEFLECTION = L/180.
5. MAX. BENDING MOMENTS:
   - MID-SPAN: 34,807 in-lb (MULLION C1)
     34,807 in-lb (MULLION C2)
     50,375 in-lb (MULLION C3)
     55,845 in-lb (MULLION C4)
   - AT ANCHORS: 52,812 in-lb (MULLION C1)
     54,538 in-lb (MULLION C2)
     72.994 in-lb (MULLION C3)
     105,927 in-lb (MULLION C4)
6. MAX. WINDLOAD REACTIONS:
   - AT HEAD/SILL F/T-ANCHOR: 1797 lb.
   - AT MID-SPAN ANCHOR: 3022 lb (NO STEEL)
     3943 lb (C2 STEEL)
     4109 lb (C3 STEEL)
     6113 lb (C4 STEEL)

SSG CORNER MULLIONS:

1. MAX. WINDLOADS = +60/-74 psf
2. MAX. SPAN TRIB. AREA = 73.8 ft^2 (SEE NOTE #1 BELOW)
3. IN THE HVHZ, MAX ANCHOR-TO-ANCHOR SPAN HEIGHT = 168 in (+/-60 psf)
   = 132 in (+60/-74 psf)
4. MAX. DEFLECTION = L/180.
5. MAX. BENDING MOMENTS:
   - MID-SPAN: 22,875 in-lb (MULLION C5)
     22,875 in-lb (MULLION C6)
     50,375 in-lb (MULLION C7)
   - AT ANCHORS: 23,319. in-lb (MULLION C5)
     54,538 in-lb (MULLION C6)
     72,994 in-lb (MULLION C7)
6. MAX. WINDLOAD REACTIONS:
   - AT HEAD/SILL F/T-ANCHOR: 1415 lb.
   - AT MID-SPAN ANCHOR: 3053 lb (NO STEEL)
     3943 lb (C6 STEEL)
     4109 lb (C7 STEEL)

REV.#	DATE	REVISION
–	12/16/24	REVISION
–	2/19/24	REVISION
–	10/15/23	2023 CODE UPDATE
–	10/12/20	1ST SUBMITTAL

PRINTS ISSUED FOR

KAWNEER
AN ARCONIC COMPANY
555 GUTHRIDGE COURT
NORCROSS, GA 30092
PH: (770) 449–5555
WWW.KAWNEER.COM

SEAL:

SCOTT WOLTERS
STATE OF FLORIDA
No 62354
PROFESSIONAL ENGINEER
AUG 17, 2020

SCOTT WOLTERS
FL PE# 62354

WOLTERS ENGINEERING
(COA# 27194)
15211 97TH ROAD N
WEST PALM BEACH, FL 33412
(561) 225–1982

PRODUCT: 1600 WALL SYSTEM 1 & 2

DWG: 1600–IR–HVHZ

SECTION: 4

SHEET: 20/42

HORIZONTAL MULLION LIMITATIONS

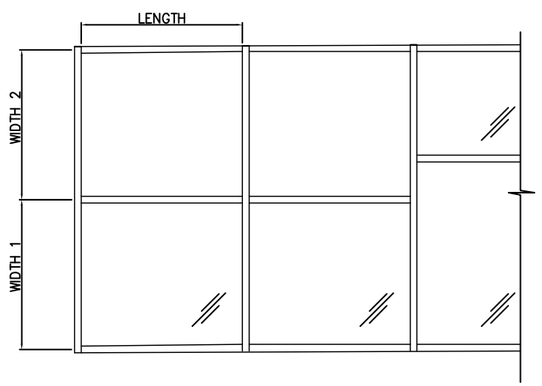

HORIZONTAL MULLION SPACING = $\frac{\text{WIDTH 1 + WIDTH 2}}{2}$

HORIZONTAL MULLION CHART

		MAX. DESIGN PRESSURE (psf)						
		INTERMEDIATE HORIZONTAL MULLIONS						
LENGTH (in)	WIDTH (in)	**H1** (+/-)	**H2** (+/-)	**H3** (+/-)	**H4** (+/-)	**H5** (+/-)	**H6** (+/-)	**H7** (+/-)
39 1/2	40 1/8	127	127	90	127	90	90	90
	69	127	127	90	90	90	90	90
	84	90	127	90	90	90	90	90
	96	90	127	90	90	90	90	90
58 1/2	46 3/4	127	127	90	90	90	90	90
	63	90	127	90	90	90	90	90
	69 1/2	90	90	90	90	90	90	90
	72	90	90	90	90	90	-	-
	92	90	90	-	90	90	-	-
68 1/4	40 1/8	127	127	90	90	-	90	90
	54	90	127	90	90	-	90	90
	59 1/2	90	127	90	90	-	90	90
	61 1/2	90	90	90	90	-	-	-
	66	83.8	83.8	-	83.8	-	-	-
	72	83.7	83.7	-	83.7	-	-	-
	79	83.7	83.7	-	83.7	-	-	-
73 3/4	42	90	127	90	90	-	90	90
	48	90	127	89.1	90	-	90	90
	50	90	127	87.3	90	-	90	90
	52 5/8	90	90	85.2	90	-	90	90
	55 1/4	90	90	83.5	90	-	82	82
	57	90	90	82.5	90	-	-	-
	66	73.6	73.6	-	73.6	-	-	-
	73 1/4	72.8	72.8	-	72.8	-	-	-
81 1/2	42	83.7	127	83.7	83.7	-	82.3	82.3
	45	80.1	127	80.1	80.1	-	78.7	78.7
	50	75.3	75.3	75.3	75.3	-	74	74
	51 5/8	74	74	74	74	-	-	-
	54	66.2	66.2	-	66.2	-	-	-
	60	63.1	63.1	-	63.1	-	-	-
	66	60.9	60.9	-	60.9	-	-	-
92 1/4	40 1/8	67.3	127	-	67.3	-	-	-
	48	59.5	59.5	-	59.5	-	-	-
	54	55.3	55.3	-	55.3	-	-	-
	58 1/2	52.9	52.9	-	52.9	-	-	-
98 1/2	42	59.9	59.9	-	59.9	-	-	-
	48	57.6	57.6	-	57.6	-	-	-
	54 7/8	50	50	-	50	-	-	-

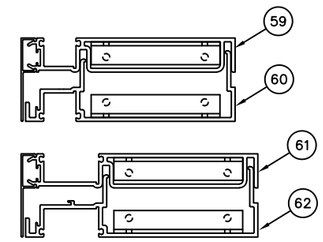

HORIZONTAL MULLION H7
(SPLICE AT CORNER)

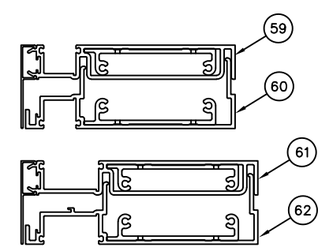

HORIZONTAL MULLION H6
(SPLICE HORIZONTAL)

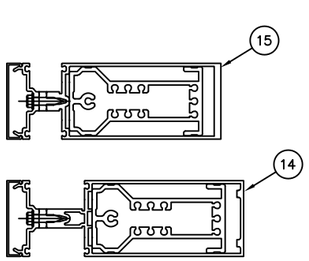

HORIZONTAL MULLION H1
(TYPICAL HORIZONTAL)

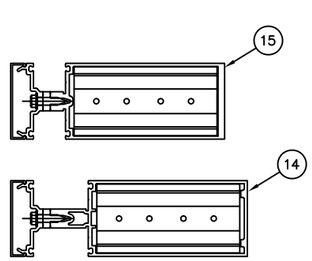

HORIZONTAL MULLION H2
(WITH HIGH PRESSURE SHEAR BLOCK)

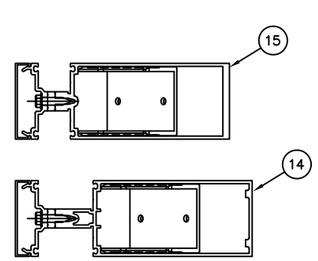

HORIZONTAL MULLION H3
(AT CORNER MULLION)

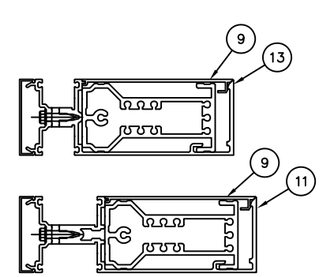

HORIZONTAL MULLION H4
(LAST BAY)

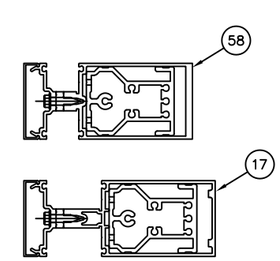

HORIZONTAL MULLION H5
(SHALLOW HORIZONTAL)

REV.#	DATE	REVISION
–	12/16/24	–
–	10/15/23	2023 CODE UPDATE
–	10/12/20	1ST SUBMITTAL
–	–	PRINTS ISSUED FOR

KAWNEER
AN ARCONIC COMPANY
555 GUTHRIDGE COURT
NORCROSS, GA 30092
PH: (770) 449-5555
WWW.KAWNEER.COM

SEAL:

SCOTT WOLTERS LICENSE No 62354 STATE OF FLORIDA PROFESSIONAL ENGINEER
AUG 17, 2026

SCOTT WOLTERS
FL PE# 62354

WOLTERS ENGINEERING
(COA# 27194)
15211 97TH ROAD N
WEST PALM BEACH, FL 33412
(561) 225-1982

PRODUCT: 1600 WALL SYSTEM 1 & 2

DWG: 1600-IR-HVHZ

SECTION: 4

LARGE AND SMALL MISSILE GLAZING
CAPTURED VERTICALS

GLASS TYPE 1 – 1/4" HEAT STRENGTHENED
0.090" SAFLEX PVB INTERLAYER
1/4" HEAT STRENGTHENED

GLASS TYPE 2 – 1/4" HEAT STRENGTHENED
0.090" KURARAY BUTACITE PVB
1/4" HEAT STRENGTHENED

GLASS TYPE 3 – 1/4" HEAT STRENGTHENED
0.100" SAFLEX HP INTERLAYER
1/4" HEAT STRENGTHENED

GLASS TYPE 4 – 1/4" HEAT STRENGTHENED
0.090" KURARAY SENTRYGLAS
1/4" HEAT STRENGTHENED

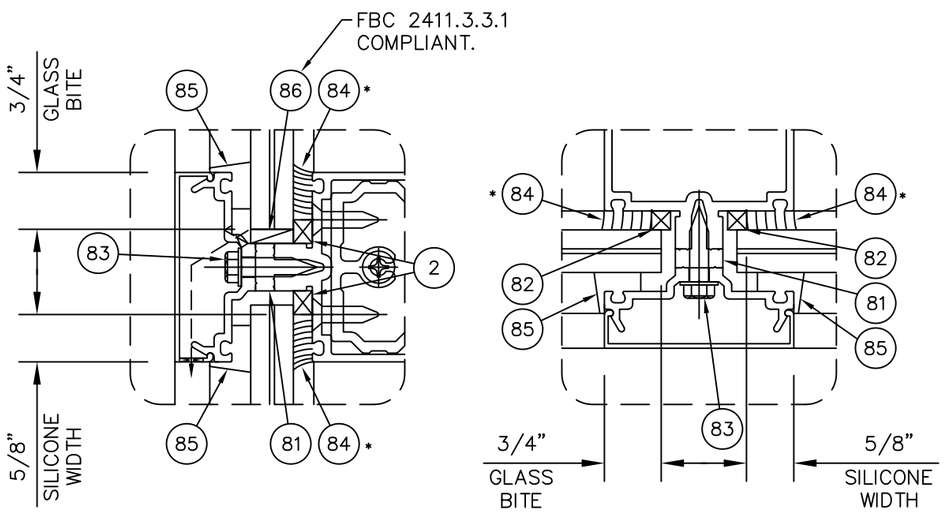

*INSTALLER NOTE: INSTALLER IS RESPONSIBLE FOR ALL REQUIRED COMPATIBILITY REVIEW AND APPROVALS WITH THE STRUCTURAL SILICONE MANUFACTURER AND THE INSULATING GLASS UNIT MANUFACTURER.

SEE SHEET 39 FOR GLAZING MATERIALS

GLASS CHART

GLASS TYPES 1 & 2 (LMI/SMI)

TESTED DLO'S = 58 1/2"x93 1/2" (65 psf), 73 3/4"x54 5/8" (65 psf)

ALLOWABLE DESIGN PRESSURE (psf)

DLO HEIGHT (in)	DLO WIDTH (in) 38	39	42	45	48	52	60	66	72	78	84	93 1/2
58 1/2	65	65	65	65	65	65	65	65	65	65	65	65
65	65	65	65	65	65	65	65	65	65	65	65	-
70	65	65	65	65	65	65	65	65	65	65	-	-
76	65	65	65	65	65	65	65	65	65	-	-	-
82	65	65	65	65	65	65	65	65	-	-	-	-
91	65	65	65	65	65	65	65	-	-	-	-	-
105	65	65	65	65	65	65	-	-	-	-	-	-
114	65	65	65	65	65	-	-	-	-	-	-	-
120	65	65	65	65	-	-	-	-	-	-	-	-
130	65	65	65	-	-	-	-	-	-	-	-	-
138	65	65	-	-	-	-	-	-	-	-	-	-
144	65	-	-	-	-	-	-	-	-	-	-	-

GLASS TYPE 3 (LMI/SMI)

TESTED DLO'S = 58 1/2"x93 1/2" (90 psf), 70 1/2"x94 1/2" (+70/-90 psf struct, +90/-100 cycle)

ALLOWABLE DESIGN PRESSURE (psf)

DLO HEIGHT (in)	DLO WIDTH (in) 38	39	42	45	48	52	60	66	70 1/2	78	84	93 1/2
58 1/2	+90/-100	+90/-100	+90/-100	+90/-100	+90/-100	+90/-100	+90/-100	+90/-100	+90/-100	+90/-100	+90/-100	+85/-100
71	+90/-100	+90/-100	+90/-100	+90/-100	+90/-100	+90/-100	+90/-100	+90/-100	+90/-100	+90/-100	+73/-94	+70/-90
74 1/4	+90/-100	+90/-100	+90/-100	+90/-100	+90/-100	+90/-100	+90/-100	+90/-100	+90/-100	+75/-97	+70/-90	-
79	+90/-100	+90/-100	+90/-100	+90/-100	+90/-100	+90/-100	+90/-100	+90/-100	+90/-100	+72/-95	-	-
85	+90/-100	+90/-100	+90/-100	+90/-100	+90/-100	+90/-100	+90/-100	+82/-100	+75/-99	+70/-90	-	-
94 1/2	+90/-100	+90/-100	+90/-100	+90/-100	+90/-100	+90/-100	+82/-100	+75/-96	+70/-90	-	-	-
101	+90/-100	+90/-100	+90/-100	+90/-100	+90/-100	+89/-100	+76/-98	+70/-90	-	-	-	-
111	+90/-100	+90/-100	+90/-100	+90/-100	+87/-100	+81/-100	+70/-90	-	-	-	-	-
120	+90/-100	+90/-100	+90/-100	+84/-100	+79/-100	+75/-97	-	-	-	-	-	-
128	+90/-100	+90/-100	+86/-100	+80/-100	+75/-97	+70/-90	-	-	-	-	-	-
138	+88/-100	+86/-100	+80/-100	+74/-96	+70/-90	-	-	-	-	-	-	-
144	+83/-100	+80/-100	+75/-96	+70/-90	-	-	-	-	-	-	-	-

GLASS TYPE 4 (LMI/SMI)

TESTED DLO'S = 58 1/2"x93 1/2" (90 psf)

ALLOWABLE DESIGN PRESSURE (psf)

DLO HEIGHT (in)	DLO WIDTH (in) 38	39	42	45	48	54	58 1/2	66	72	78	84	93 1/2
58 1/2	90	90	90	90	90	90	90	90	90	90	90	90
65	90	90	90	90	90	90	90	90	90	90	90	-
70	90	90	90	90	90	90	90	90	90	90	-	-
76	90	90	90	90	90	90	90	90	90	-	-	-
83	90	90	90	90	90	90	90	90	-	-	-	-
93 1/2	90	90	90	90	90	90	90	-	-	-	-	-
101	90	90	90	90	90	90	-	-	-	-	-	-
114	90	90	90	90	90	-	-	-	-	-	-	-
121	90	90	90	90	-	-	-	-	-	-	-	-
130	90	90	90	-	-	-	-	-	-	-	-	-
140	90	90	-	-	-	-	-	-	-	-	-	-
144	90	-	-	-	-	-	-	-	-	-	-	

REV.#	DATE	REVISION
-	12/16/24	2023 CODE UPDATE
-	10/15/23	1ST SUBMITTAL
-	10/12/20	PRINTS ISSUED FOR

KAWNEER
AN ARCONIC COMPANY
555 GUTHRIDGE COURT
NORCROSS, GA 30092
PH: (770) 449-5555
WWW.KAWNEER.COM

SEAL:

SCOTT WOLTERS
FL PE# 62354

WOLTERS ENGINEERING
(COA# 27194)
15211 97TH ROAD N
WEST PALM BEACH, FL 33412
(561) 225-1982

PRODUCT: 1600 WALL SYSTEM 1 & 2
DWG: 1600-IR-HVHZ
SECTION: 5
SHEET: 22/42

LARGE AND SMALL MISSILE GLAZING
CAPTURED VERTICALS

GLASS TYPE 5 – 1/4" H.S. or TEMPERED
1/2" AIR SPACE (ALUM SPACER)
1/4" HEAT STRENGTHENED
0.090" SAFLEX PVB INTERLAYER
1/4" HEAT STRENGTHENED

GLASS TYPE 6 – 1/4" H.S. or TEMPERED
1/2" AIR SPACE (ALUM SPACER)
1/4" HEAT STRENGTHENED
0.090" KURARAY BUTACITE PVB
1/4" HEAT STRENGTHENED

GLASS TYPE 7 – 1/4" TEMPERED
1/2" AIR SPACE (ALUM SPACER)
1/4" HEAT STRENGTHENED
0.090" KURARAY SENTRYGLAS
1/4" HEAT STRENGTHENED

GLASS TYPE 8 – 1/4" H.S. or TEMPERED
1/2" AIR SPACE (ALUM SPACER)
1/4" HEAT STRENGTHENED
0.075" SAFLEX STORM INTERLAYER
1/4" HEAT STRENGTHENED

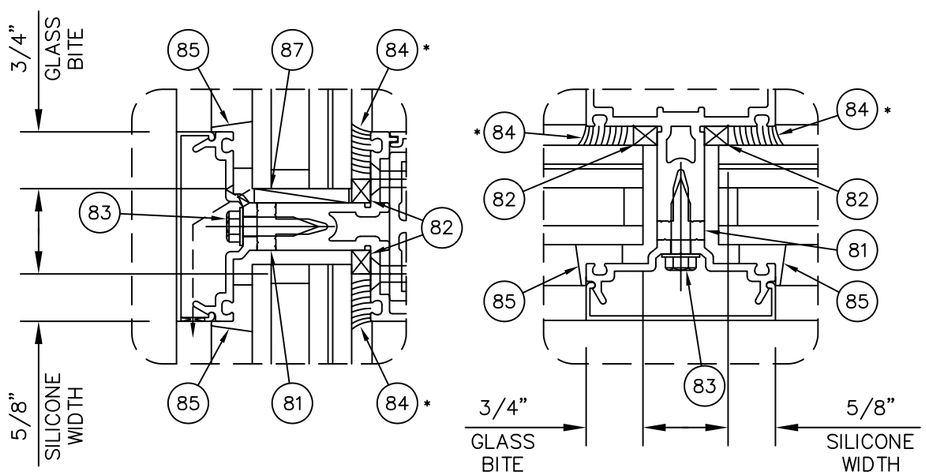

*INSTALLER NOTE: INSTALLER IS RESPONSIBLE FOR ALL REQUIRED COMPATIBILITY REVIEW AND APPROVALS WITH THE STRUCTURAL SILICONE MANUFACTURER AND THE INSULATING GLASS UNIT MANUFACTURER.

SEE SHEET 39 FOR GLAZING MATERIALS

GLASS CHART

GLASS TYPES 5 & 6 (LMI/SMI)

TESTED DLO'S = 58 1/2"x93 1/2" (90 psf), 73 3/4"x54 5/8" (90 psf)

ALLOWABLE DESIGN PRESSURE (psf)

DLO HEIGHT (in)	DLO WIDTH (in) 38	39	42	45	48	52	58 1/2	66	72	78	84	93 1/2
58 1/2	90	90	90	90	90	90	90	90	90	90	90	90
65	90	90	90	90	90	90	90	90	90	90	90	-
70	90	90	90	90	90	90	90	90	90	90	-	-
76	90	90	90	90	90	90	90	90	90	-	-	-
82	90	90	90	90	90	90	90	90	-	-	-	-
93 1/2	90	90	90	90	90	90	90	-	-	-	-	-
105	90	90	90	90	90	90	-	-	-	-	-	-
114	90	90	90	90	90	-	-	-	-	-	-	-
120	90	90	90	90	-	-	-	-	-	-	-	-
130	90	90	90	-	-	-	-	-	-	-	-	-
138	90	90	-	-	-	-	-	-	-	-	-	-
144	90	-	-	-	-	-	-	-	-	-	-	-

GLASS TYPE 7 (LMI/SMI)

TESTED DLO'S = 98 1/2"x70 1/2" (50 psf), 60"x94 3/4" (110 psf)

ALLOWABLE DESIGN PRESSURE (psf)

DLO HEIGHT (in)	DLO WIDTH (in) 39	43	48	52 1/2	57 1/2	60	64	70 1/2	73	78	90	98 1/2
70 1/2	110	110	110	110	110	110	110	110	110	110	50	50
72	110	110	110	110	110	110	110	110	110	110	50	-
77	110	110	110	110	110	110	110	110	110	50	50	-
80	110	110	110	110	110	110	110	110	50	50	-	-
88 1/2	110	110	110	110	110	110	110	50	50	50	-	-
94 3/4	110	110	110	110	110	110	50	50	50	-	-	-
98 1/2	110	110	110	110	110	50	50	50	-	-	-	-
102	110	110	110	110	50	50	50	-	-	-	-	-
108	110	110	110	110	50	50	50	-	-	-	-	-
115	110	110	110	50	50	50	-	-	-	-	-	-
118	110	110	110	50	50	-	-	-	-	-	-	-
132	110	110	50	50	-	-	-	-	-	-	-	-
144	110	50	50	-	-	-	-	-	-	-	-	-

GLASS TYPE 8 (LMI/SMI)

TESTED DLO'S = 58 1/2"x67" (+100/-130 psf)

ALLOWABLE DESIGN PRESSURE (psf)

DLO HEIGHT (in)	DLO WIDTH (in) 36	39	42	45	48	52	58 1/2	60	66	72	81	93 1/2
41 1/2	+100/-130	+100/-130	+100/-130	+100/-130	+100/-130	+100/-130	+100/-130	+100/-130	+100/-130	+100/-130	+100/-130	+100/-130
48	+100/-130	+100/-130	+100/-130	+100/-130	+100/-130	+100/-130	+100/-130	+100/-130	+100/-130	+100/-130	+100/-130	-
54	+100/-130	+100/-130	+100/-130	+100/-130	+100/-130	+100/-130	+100/-130	+100/-130	+100/-130	+100/-130	-	-
60	+100/-130	+100/-130	+100/-130	+100/-130	+100/-130	+100/-130	+100/-130	+100/-130	+100/-130	-	-	-
66	+100/-130	+100/-130	+100/-130	+100/-130	+100/-130	+100/-130	+100/-130	+100/-130	-	-	-	-
67	+100/-130	+100/-130	+100/-130	+100/-130	+100/-130	+100/-130	+100/-130	-	-	-	-	-
75	+100/-130	+100/-130	+100/-130	+100/-130	+100/-130	+100/-130	-	-	-	-	-	-
81	+100/-130	+100/-130	+100/-130	+100/-130	+100/-130	-	-	-	-	-	-	-
87	+100/-130	+100/-130	+100/-130	+100/-130	-	-	-	-	-	-	-	-
93	+100/-130	+100/-130	+100/-130	-	-	-	-	-	-	-	-	-
100	+100/-130	+100/-130	-	-	-	-	-	-	-	-	-	-
108	+100/-130	-	-	-	-	-	-	-	-	-	-	-

GLAZING NOTES:
1. IN THE HVHZ, THE HEAT STRENGTHENED OUTER LITE FOR GLASS TYPES 5,6, & 8 ARE NOT APPROVED FOR USE MORE THAN 30 ft. ABOVE GRADE.
2. SETTING BLOCKS 86 AND 87 MEET THE REQUIREMENTS OF FBC SECTION 2411.3.3.1, AND ARE INSTALLED (2) PER LITE.

REV.#	DATE	REVISION
–	12/16/24	2023 CODE UPDATE
–	10/15/23	1ST SUBMITTAL
–	10/12/20	PRINTS ISSUED FOR

KAWNEER
AN ARCONIC COMPANY
555 GUTHRIDGE COURT
NORCROSS, GA 30092
PH: (770) 449-5555
WWW.KAWNEER.COM

SEAL:
SCOTT WOLTERS
FL PE# 62354
WOLTERS ENGINEERING
(COA# 27194)
15211 97TH ROAD N
WEST PALM BEACH, FL 33412
(561) 225-1982

PRODUCT: 1600 WALL SYSTEM 1 & 2
DWG: 1600-IR-HVHZ
SECTION: 5
SHEET: 23/42

LARGE AND SMALL MISSILE GLAZING
CAPTURED VERTICALS

GLASS TYPE 7D – 1/4" TEMPERED
1/2" AIR SPACE (ALUM SPACER)
1/4" HEAT STRENGTHENED
0.090" KURARAY SENTRYGLAS
1/4" HEAT STRENGTHENED

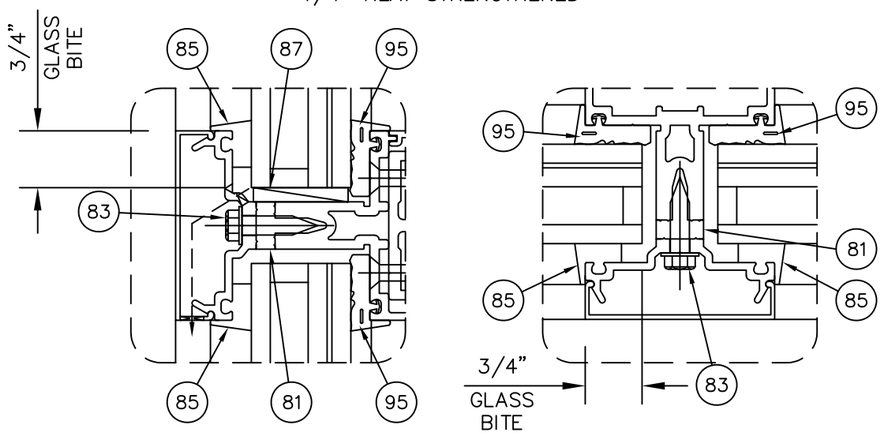

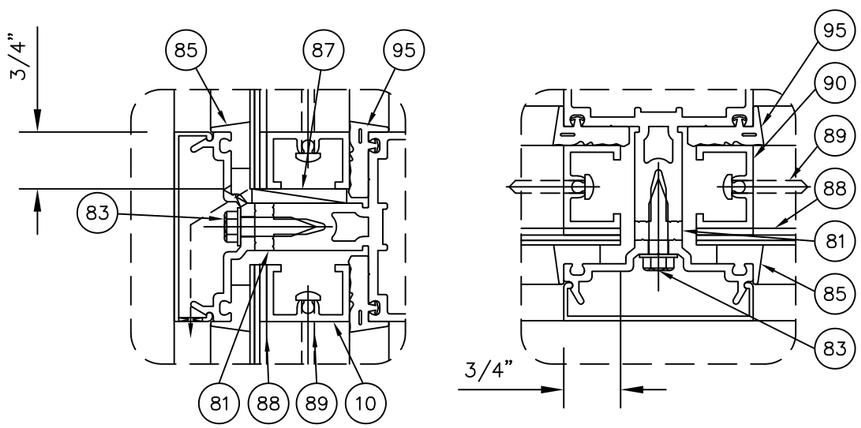

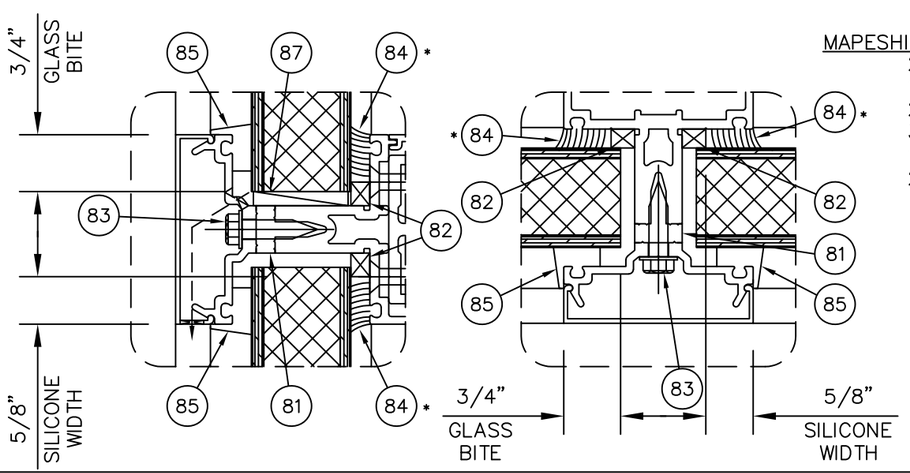

GLASS TYPE 7D (LMI/SMI - DRY GLAZED)												
TESTED DLO'S = 98 1/2"x70 1/2" (50 psf)												
	ALLOWABLE DESIGN PRESSURE (psf)											
DLO HEIGHT (in)	DLO WIDTH (in)											
	39	43	48	52 1/2	57 1/2	60	64	70 1/2	73	78	90	98 1/2
70 1/2	50	50	50	50	50	50	50	50	50	50	50	50
77	50	50	50	50	50	50	50	50	50	50	50	-
88 1/2	50	50	50	50	50	50	50	50	50	50	-	-
94 3/4	50	50	50	50	50	50	50	50	50	-	-	-
98 1/2	50	50	50	50	50	50	50	50	-	-	-	-
108	50	50	50	50	50	50	50	-	-	-	-	-
115	50	50	50	50	50	50	-	-	-	-	-	-
118	50	50	50	50	50	-	-	-	-	-	-	-
132	50	50	50	50	-	-	-	-	-	-	-	-
144	50	50	50	-	-	-	-	-	-	-	-	-

SEE SHEET 39 FOR GLAZING MATERIALS

REYNOBOND ACM PANEL:
0.130" REYNOBOND ACM PANEL
0.090"x3/4" 3M VHB GLAZING TAPE
3/4"x1.093" ALUMINUM CHANNEL

NOTE – #90 REINFORCING CHANNELS ARE REQUIRED, TAPED TO THE PANEL ACROSS THE SHORT DIMENSION WITH #88 GLAZING TAPE, SPACED 23 7/8" MAX. O.C.

MAPESHIELD PANEL:
26 Ga. ALUMINUM SKIN
1/8" TEMPERED HARDBOARD
24 Ga. GALVANIZED STEEL
3/4" FOAM CORE
1/8" TEMPERED HARDBOARD
26 GA. ALUMINUM SKIN

*INSTALLER NOTE: INSTALLER IS RESPONSIBLE FOR ALL REQUIRED COMPATIBILITY REVIEW AND APPROVALS WITH THE STRUCTURAL SILICONE MANUFACTURER AND THE INSULATING GLASS UNIT MANUFACTURER.

PANEL SIZE/PRESSURE CHART				
PANEL TYPE	MAX DLO WIDTH (in)	MAX DLO HEIGHT (in)	MAX AREA (ft^2)	MAX DESIGN PRESSURE (psf)
REYNOBOND PANEL	57 1/2	94 3/4	38.0	+/-80
MAPESHIELD PANEL	58 1/2	116 1/2	47.3	+/-75
1/8" ALUM BRAKEMETAL PANEL	21 7/8	144	21.9	+/-71

PANEL NOTES:
1. HORIZONTAL AND VERTICAL DLO DIMENSIONS MAY BE TRANSPOSED.
2. COMPARATIVE ANALYSIS MAY BE PERFORMED PER FBC REQUIREMENTS, BUT THE LEAST DIMENSION FOR EACH PANEL TYPE MAY NOT BE EXCEEDED.
3. SETTING BLOCK #81 MEETS THE REQUIREMENTS OF FBC SECTION 2411.3.3.1, AND IS INSTALLED (2) PER LITE.

1/8" BRAKE METAL PANEL:
1/8" ALUMINUM BRAKE METAL

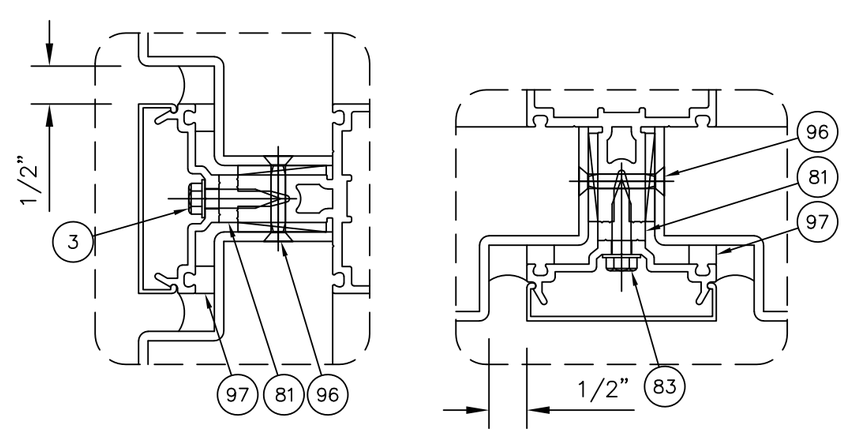

REV.#	REVISION	DATE
–	2023 CODE UPDATE	12/16/24
–	1ST SUBMITTAL	10/15/23
–	PRINTS ISSUED FOR	10/12/20

KAWNEER
AN ARCONIC COMPANY
555 GUTHRIDGE COURT
NORCROSS, GA 30092
PH: (770) 449-5555
WWW.KAWNEER.COM

SEAL:
SCOTT WOLTERS
SCOTT WOLTERS LICENSED No 62354 STATE OF FLORIDA PROFESSIONAL ENGINEER
AUG 17, 2026

SCOTT WOLTERS
FL PE# 62354
WOLTERS ENGINEERING
(COA# 27194)
15211 97TH ROAD N
WEST PALM BEACH, FL 33412
(561) 225-1982

PRODUCT: 1600 WALL SYSTEM 1 & 2
DWG: 1600-IR-HVHZ
SECTION: 5
SHEET: 24/42

LARGE AND SMALL MISSILE GLAZING
SSG VERTICALS

GLASS TYPE 9 – 1/4" HEAT STRENGTHENED
0.090" KURARAY SENTRYGLAS
1/4" HEAT STRENGTHENED

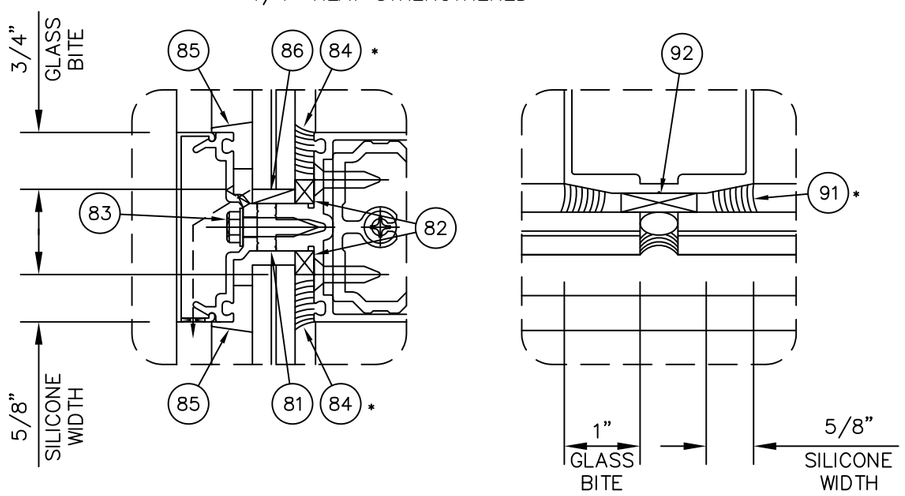

GLASS TYPE 10 – 1/4" TEMPERED
1/2" AIR SPACE (ALUM SPACER)
1/4" HEAT STRENGTHENED
0.100" SAFLEX HP INTERLAYER
1/4" HEAT STRENGTHENED

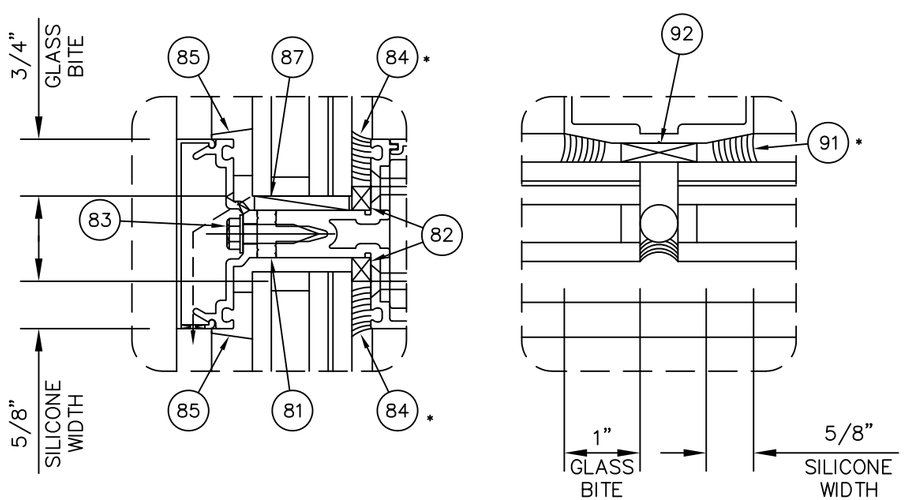

*INSTALLER NOTE: INSTALLER IS RESPONSIBLE FOR ALL REQUIRED COMPATIBILITY REVIEW AND APPROVALS WITH THE STRUCTURAL SILICONE MANUFACTURER AND THE INSULATED GLASS UNIT MANUFACTURERS.

GLASS CHART

GLASS TYPE 9 (LMI/SMI)

TESTED DLO'S = 81 1/2"x30" (+60/-74 psf)

ALLOWABLE DESIGN PRESSURE (psf)

DLO HEIGHT (in)	DLO WIDTH (in) 30	36	42	48	54	60	66	72	78	84	81 1/2
30	+60/-74	+60/-74	+60/-74	+60/-74	+60/-74	+60/-74	+60/-74	+60/-74	+60/-74	+60/-74	+60/-74
31	+60/-74	+60/-74	+60/-74	+60/-74	+60/-74	+60/-74	+60/-74	+60/-74	+60/-74	+60/-74	-
33 1/2	+60/-74	+60/-74	+60/-74	+60/-74	+60/-74	+60/-74	+60/-74	+60/-74	+60/-74	-	-
36	+60/-74	+60/-74	+60/-74	+60/-74	+60/-74	+60/-74	+60/-74	+60/-74	-	-	-
39 1/2	+60/-74	+60/-74	+60/-74	+60/-74	+60/-74	+60/-74	+60/-74	-	-	-	-
43 1/2	+60/-74	+60/-74	+60/-74	+60/-74	+60/-74	+60/-74	-	-	-	-	-
48 1/2	+60/-74	+60/-74	+60/-74	+60/-74	+60/-74	-	-	-	-	-	-
54 1/4	+60/-74	+60/-74	+60/-74	+60/-74	-	-	-	-	-	-	-
62 1/2	+60/-74	+60/-74	+60/-74	-	-	-	-	-	-	-	-
72 1/2	+60/-74	+60/-74	-	-	-	-	-	-	-	-	-
81 1/2	+60/-74	-	-	-	-	-	-	-	-	-	-

GLASS TYPE 10 (LMI/SMI)

TESTED DLO'S = 57 1/2"x93 1/2" (+/-60 psf)

ALLOWABLE DESIGN PRESSURE (psf)

DLO HEIGHT (in)	DLO WIDTH (in) 36	42	48	54	57 1/2	60	66	72	78	84	93 1/2
57 1/2	60	60	60	60	60	60	60	60	60	60	60
64	60	60	60	60	60	60	60	60	60	60	-
68	60	60	60	60	60	60	60	60	60	-	-
74	60	60	60	60	60	60	60	60	-	-	-
81	60	60	60	60	60	60	60	-	-	-	-
89	60	60	60	60	60	60	-	-	-	-	-
93 1/2	60	60	60	60	60	-	-	-	-	-	-
99	60	60	60	60	-	-	-	-	-	-	-
112	60	60	60	-	-	-	-	-	-	-	-
128	60	60	-	-	-	-	-	-	-	-	-
144	60	-	-	-	-	-	-	-	-	-	

GLAZING NOTES:
1. SETTING BLOCKS 86 AND 87 MEET THE REQUIREMENTS OF FBC SECTION 2411.3.3.1, AND ARE INSTALLED (2) PER LITE.

SEE SHEET 39 FOR GLAZING MATERIALS

REV.#	DATE
– CODE UPDATE	8/17/26
– REVISION	12/16/24
– 2023 CODE UPDATE	10/15/23
– 1ST SUBMITTAL	10/12/20
– PRINTS ISSUED FOR	

KAWNEER
AN ARCONIC COMPANY
555 GUTHRIDGE COURT
NORCROSS, GA 30092
PH: (770) 449-5555
WWW.KAWNEER.COM

SEAL:
SCOTT WOLTERS
FL PE# 62354
WOLTERS ENGINEERING
(COA# 27194)
15211 97TH ROAD N
WEST PALM BEACH, FL 33412
(561) 225-1982

PRODUCT: 1600 WALL SYSTEM 1 & 2
DWG: 1600-IR-HVHZ
SECTION: 5
SHEET: 25/42

SMALL MISSILE ONLY GLAZING
CAPTURED VERTICALS

GLASS TYPE 11 – 1/4" HEAT STRENGTHENED
0.060" SAFLEX PVB INTERLAYER
1/4" HEAT STRENGTHENED

GLASS TYPE 12 – 1/4" HEAT STRENGTHENED
0.060" KURARAY BUTACITE PVB
1/4" HEAT STRENGTHENED

GLASS TYPE 13 – 1/4" HEAT STRENGTHENED
0.090" SAFLEX PVB INTERLAYER
1/4" HEAT STRENGTHENED

GLASS TYPE 14 – 1/4" HEAT STRENGTHENED
0.090" KURARAY BUTACITE PVB
1/4" HEAT STRENGTHENED

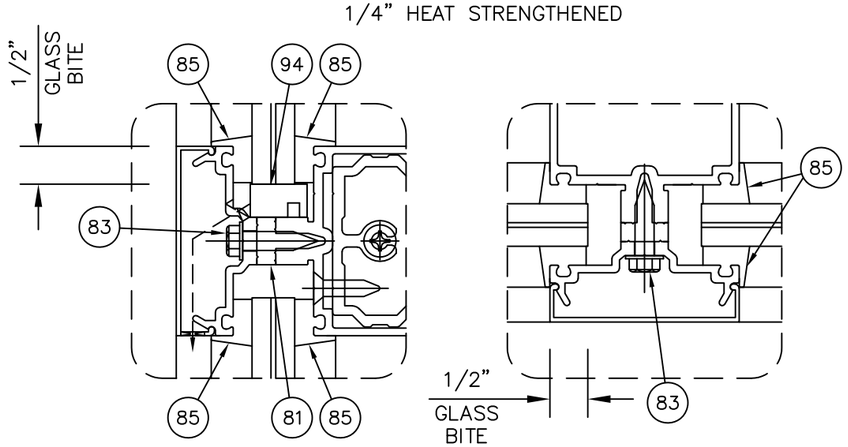

GLASS TYPE 15 – 1/4" TEMPERED
1/2" AIR SPACE (ALUM SPACER)
1/4" HEAT STRENGTHENED
0.060" SAFLEX PVB INTERLAYER
1/4" HEAT STRENGTHENED

GLASS TYPE 16 – 1/4" TEMPERED
1/2" AIR SPACE (ALUM SPACER)
1/4" HEAT STRENGTHENED
0.060" KURARAY BUTACITE PVB
1/4" HEAT STRENGTHENED

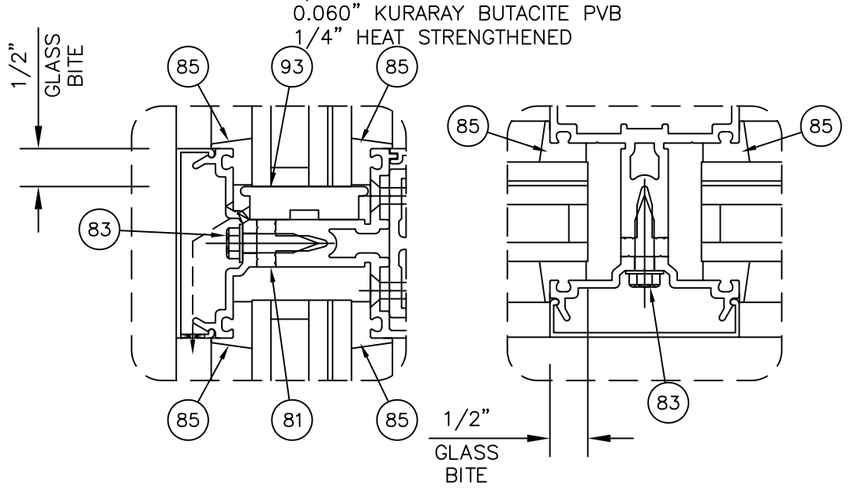

GLASS CHART

GLASS TYPES 11, 12, 13, & 14 (SMI ONLY)

TESTED DLO'S = 58 1/2"x82 1/8" (90 psf)

ALLOWABLE DESIGN PRESSURE (psf)

DLO HEIGHT (in)	DLO WIDTH (in) 33 1/4	36	40	44 1/2	48	50 5/8	58 1/2	66	72	78	84	93 1/2
51 3/8	90	90	90	90	90	90	90	90	90	90	90	90
57	90	90	90	90	90	90	90	90	90	90	90	-
61 1/2	90	90	90	90	90	90	90	90	90	90	-	-
66 3/4	90	90	90	90	90	90	90	90	90	-	-	-
72 3/4	90	90	90	90	90	90	90	90	-	-	-	-
82 1/8	90	90	90	90	90	90	90	-	-	-	-	-
94 3/4	90	90	90	90	90	90	-	-	-	-	-	-
100	90	90	90	90	90	-	-	-	-	-	-	-
108	90	90	90	90	-	-	-	-	-	-	-	-
120	90	90	90	-	-	-	-	-	-	-	-	-
132	90	90	-	-	-	-	-	-	-	-	-	-
144	90	-	-	-	-	-	-	-	-	-	-	-

GLASS TYPES 15 & 16 (SMI ONLY)

TESTED DLO'S = 58 1/2"x93 1/2" (90 psf), 67 1/2"x116 1/2" (71 psf)

ALLOWABLE DESIGN PRESSURE (psf)

DLO HEIGHT (in)	DLO WIDTH (in) 38	41	45 1/2	54 1/2	58 1/2	63	69	75	78 1/2	84	90	99 1/2
55	90	90	90	90	90	90	90	90	90	90	90	90
60 3/4	90	90	90	90	90	90	90	90	90	90	90	71
65	90	90	90	90	90	90	90	90	90	90	71	71
69 1/2	90	90	90	90	90	90	90	90	90	71	71	71
72 3/4	90	90	90	90	90	90	90	90	71	71	71	71
78 3/4	90	90	90	90	90	90	90	71	71	71	71	71
86 1/2	90	90	90	90	90	90	71	71	71	71	71	-
93 1/2	90	90	90	90	90	71	71	71	71	71	-	-
100	90	90	90	90	71	71	71	71	71	-	-	-
104 1/2	90	90	90	71	71	71	71	71	-	-	-	-
113 1/2	90	90	90	71	71	71	71	-	-	-	-	-
120	90	90	90	71	71	71	-	-	-	-	-	-
132	90	90	71	71	71	-	-	-	-	-	-	-
144	90	71	71	71	-	-	-	-	-	-	-	-

GLAZING NOTES:
1. GLASS TYPES ON THIS SHEET ARE SMALL MISSILE IMPACT RESISTANT ONLY. SHUTTERS ARE REQUIRED FOR USE BELOW 30 FT. IN WINDBORNE DEBRIS REGIONS.
2. SETTING BLOCKS 93 AND 94 MEET THE REQUIREMENTS OF FBC SECTION 2411.3.3.1, AND ARE INSTALLED (2) PER LITE.

SEE SHEET 39 FOR GLAZING MATERIALS

REV.#	DATE	REVISION
–	12/16/24	2023 CODE UPDATE
–	10/15/23	1ST SUBMITTAL
–	10/12/20	PRINTS ISSUED FOR

KAWNEER
AN ARCONIC COMPANY
555 GUTHRIDGE COURT
NORCROSS, GA 30092
PH: (770) 449-5555
WWW.KAWNEER.COM

SEAL:
SCOTT WOLTERS LICENSE No 62354 STATE OF FLORIDA PROFESSIONAL ENGINEER
AUG 17, 2026

SCOTT WOLTERS
FL PE# 62354
WOLTERS ENGINEERING
(COA# 27194)
15211 97TH ROAD N
WEST PALM BEACH, FL 33412
(561) 225-1982

PRODUCT: 1600 WALL SYSTEM 1 & 2
DWG: 1600-IR-HVHZ
SECTION: 5
SHEET: 26/42

SMALL MISSILE ONLY GLAZING
SSG VERTICALS

GLASS TYPE 17 – 1/4" HEAT STRENGTHENED
0.060" KURARAY BUTACITE PVB
1/4" HEAT STRENGTHENED

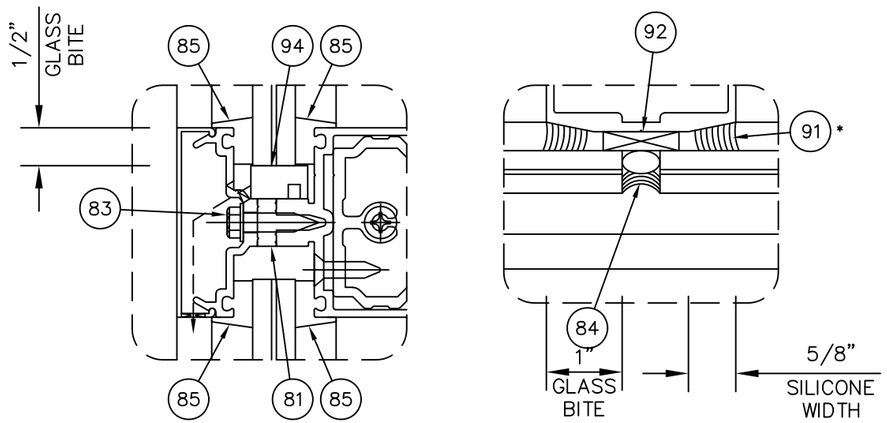

GLASS TYPE 18 – 1/4" TEMPERED
1/2" AIR SPACE (ALUM SPACER)
1/4" HEAT STRENGTHENED
0.060" SAFLEX PVB INTERLAYER
1/4" HEAT STRENGTHENED

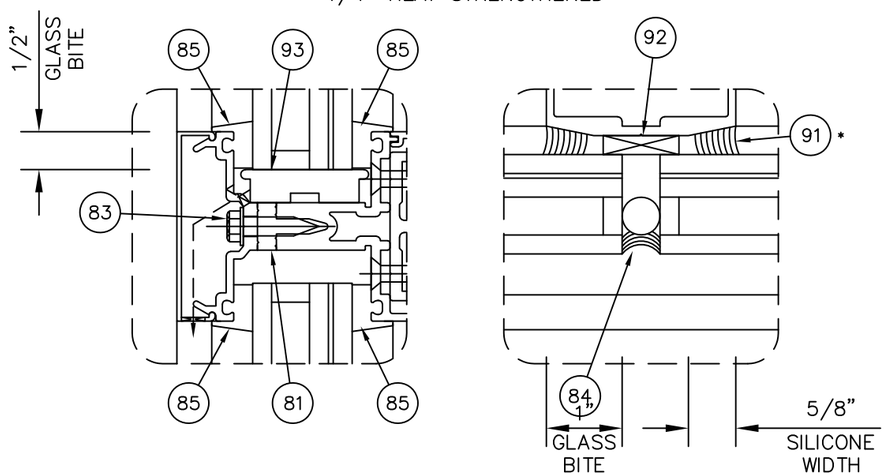

*INSTALLER NOTE: INSTALLER IS RESPONSIBLE FOR ALL REQUIRED COMPATIBILITY REVIEW AND APPROVALS WITH THE STRUCTURAL SILICONE MANUFACTURER AND THE INSULATING GLASS UNIT MANUFACTURER.

GLASS CHART

GLASS TYPE 17 (SMI ONLY)

TESTED DLO'S = 57 1/2"x82 1/2" (+/-60 psf), 81 1/2"x45 1/2" (+60/-74 psf)

ALLOWABLE DESIGN PRESSURE (psf)

DLO HEIGHT (in)	DLO WIDTH (in) 39	45	48	53	57 1/2	63	68 1/2	73	82 1/8	88	93 1/2
50 1/2	+60/-74	+60/-74	+60/-74	+60/-74	+60/-74	+60/-74	+60/-74	+60/-74	60	60	60
53 1/2	+60/-74	+60/-74	+60/-74	+60/-74	+60/-74	+60/-74	+60/-74	+60/-74	60	60	-
57 1/2	+60/-74	+60/-74	+60/-74	+60/-74	+60/-74	+60/-74	+60/-74	60	60	-	-
60 1/2	+60/-74	+60/-74	+60/-74	+60/-74	+60/-74	+60/-74	60	60	-	-	-
64 1/2	+60/-74	+60/-74	+60/-74	+60/-74	+60/-74	60	60	60	-	-	-
69	+60/-74	+60/-74	+60/-74	+60/-74	60	60	60	-	-	-	-
75	+60/-74	+60/-74	+60/-74	60	60	60	-	-	-	-	-
82 1/8	+60/-74	+60/-74	60	60	60	-	-	-	-	-	-
89	+60/-74	60	60	60	-	-	-	-	-	-	-
98	60	60	60	-	-	-	-	-	-	-	-
105	60	60	-	-	-	-	-	-	-	-	-
120	60	-	-	-	-	-	-	-	-	-	-

GLASS TYPE 18 (SMI ONLY)

TESTED DLO'S = 57 1/2"x82 1/2" (+/-60 psf)

ALLOWABLE DESIGN PRESSURE (psf)

DLO HEIGHT (in)	DLO WIDTH (in) 39	45	48	53	57 1/2	63	68 1/2	73	82 1/8	88	93 1/2
50 1/2	60	60	60	60	60	60	60	60	60	60	60
53 1/2	60	60	60	60	60	60	60	60	60	60	-
57 1/2	60	60	60	60	60	60	60	60	60	-	-
60 1/2	60	60	60	60	60	60	60	60	-	-	-
64 1/2	60	60	60	60	60	60	60	60			
69	60	60	60	60	60	60	60	-	-	-	-
75	60	60	60	60	60	60	-	-	-	-	-
82 1/8	60	60	60	60	60	-	-	-	-	-	-
89	60	60	60	60	-	-	-	-	-	-	-
98	60	60	60	-	-	-	-	-	-	-	-
105	60	60	-	-	-	-	-	-	-	-	-
120	60	-	-	-	-	-	-	-	-	-	-

GLAZING NOTES:

1. GLASS TYPES ON THIS SHEET ARE SMALL MISSILE IMPACT RESISTANT ONLY. SHUTTERS ARE REQUIRED FOR USE BELOW 30 FT. IN WINDBORNE DEBRIS REGIONS.
2. SETTING BLOCKS 93 AND 94 MEET THE REQUIREMENTS OF FBC SECTION 2411.3.3.1, AND ARE INSTALLED (2) PER LITE.

SEE SHEET 39 FOR GLAZING MATERIALS

REV.#	DATE	
–	8/17/26	CODE UPDATE
–	12/16/24	REVISION
–	10/15/23	2023 CODE UPDATE
–	10/12/20	1ST SUBMITTAL
–		PRINTS ISSUED FOR

KAWNEER
AN ARCONIC COMPANY
555 GUTHRIDGE COURT
NORCROSS, GA 30092
PH: (770) 449-5555
WWW.KAWNEER.COM

SEAL:

SCOTT WOLTERS LICENSE No 62354 STATE OF FLORIDA PROFESSIONAL ENGINEER
AUG 27, 2026

SCOTT WOLTERS
FL PE# 62354

WOLTERS ENGINEERING
(COA# 27194)
15211 97TH ROAD N
WEST PALM BEACH, FL 33412
(561) 225-1982

PRODUCT: 1600 WALL SYSTEM 1 & 2
DWG: 1600-IR-HVHZ
SECTION: 5
SHEET: 27/42

HEAD/SILL ANCHOR DETAILS

SEE CHART ON SHEET 31 FOR
FASTENER & SUBSTRATE INFORMATION.

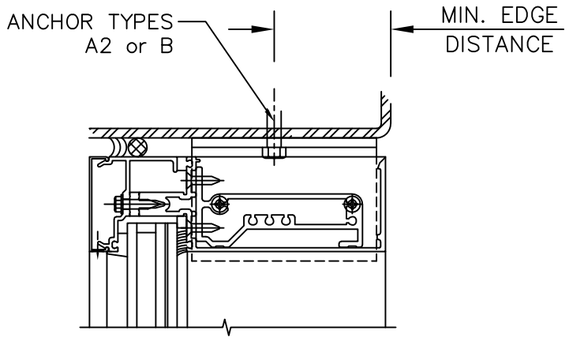

IN STEEL

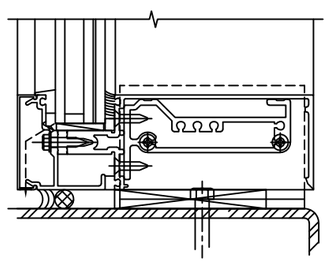

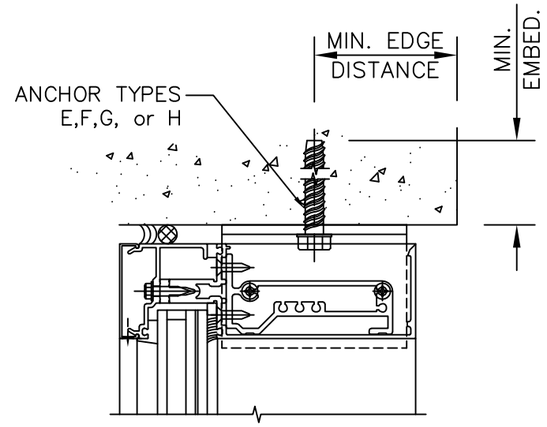

IN CONCRETE

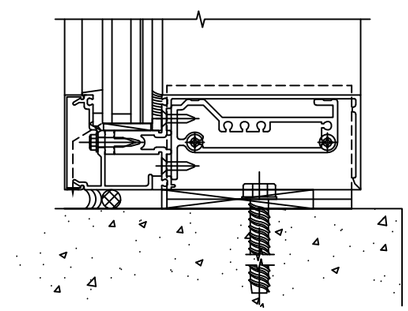

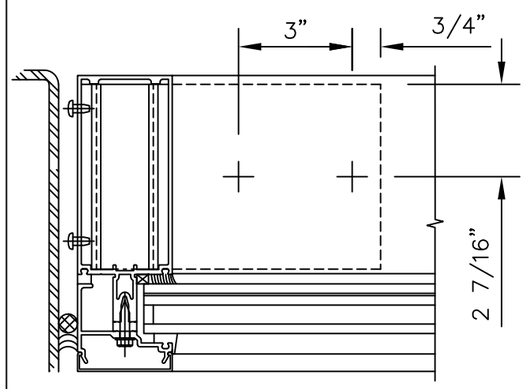

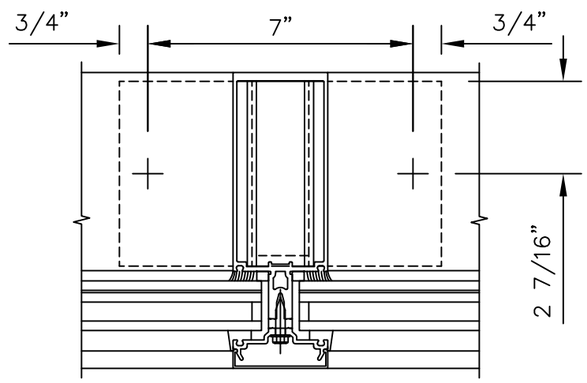

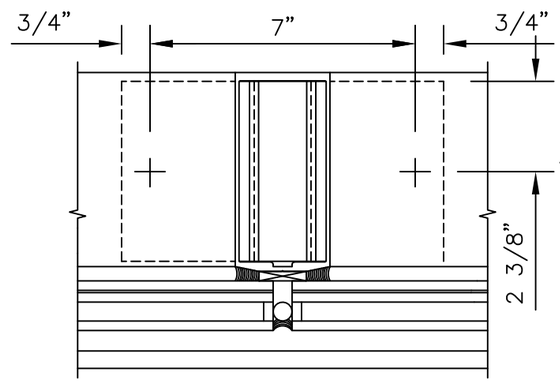

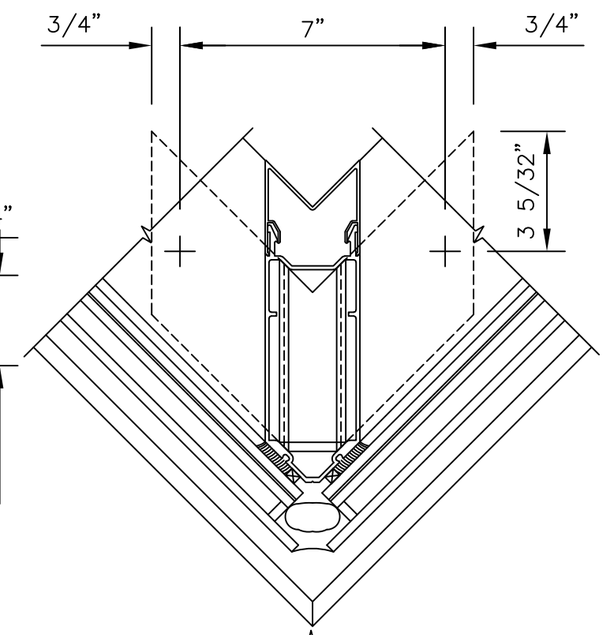

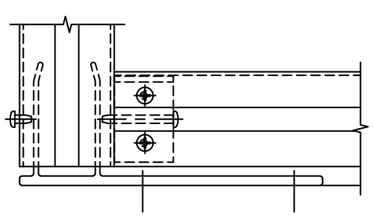

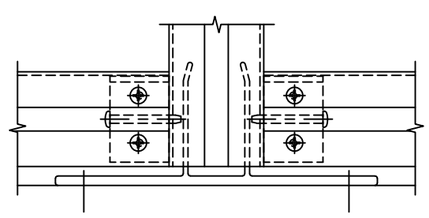

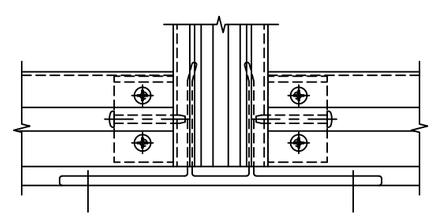

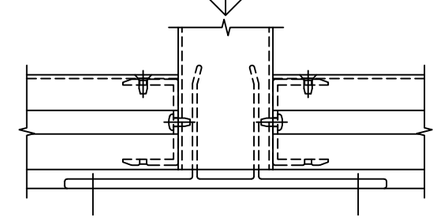

REV.#	DATE	REVISION
–	12/16/24	REVISION
–	10/15/23	2023 CODE UPDATE
–	10/12/20	1ST SUBMITTAL
–		PRINTS ISSUED FOR

KAWNEER
AN ARCONIC COMPANY
555 GUTHRIDGE COURT
NORCROSS, GA 30092
PH: (770) 449-5555
WWW.KAWNEER.COM

SEAL:

SCOTT WOLTERS
SCOTT WOLTERS LICENSE No 62354 STATE OF FLORIDA PROFESSIONAL ENGINEER
AUG 9, 2026

SCOTT WOLTERS
FL PE# 62354

WOLTERS ENGINEERING
(COA# 27194)
15211 97TH ROAD N
WEST PALM BEACH, FL 33412
(561) 225-1982

PRODUCT:
1600 WALL SYSTEM 1 & 2

DWG:
1600-IR-HVHZ

SECTION:
6

SHEET:
28/42

HEAD/SILL ANCHOR DETAILS

SEE CHART ON SHEET 31 FOR
FASTENER & SUBSTRATE INFORMATION.

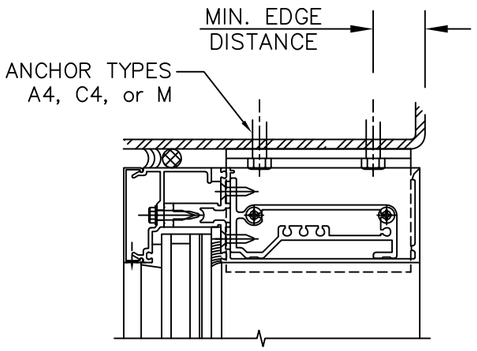

IN STEEL

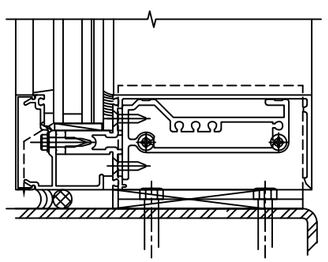

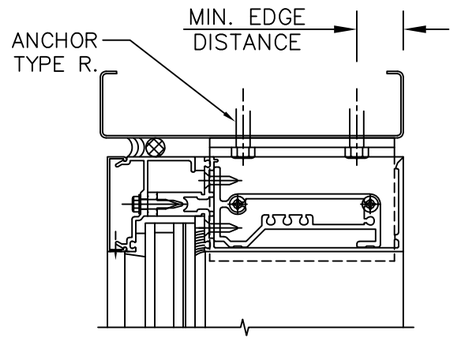

IN METAL STUD

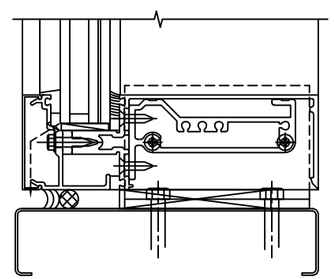

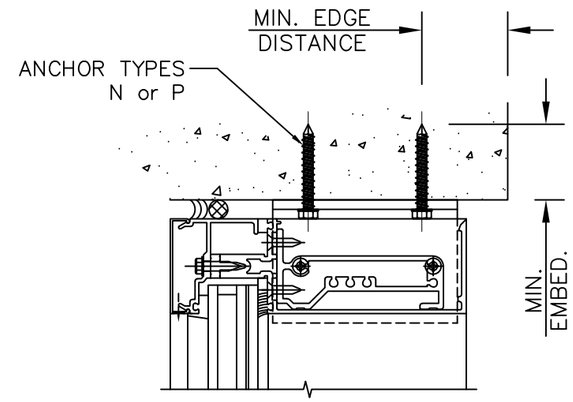

IN CONCRETE

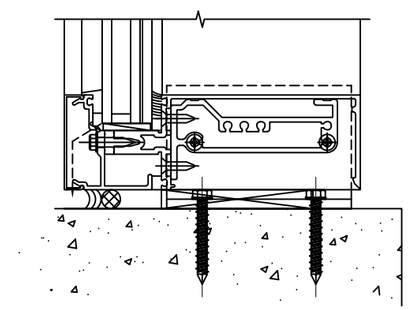

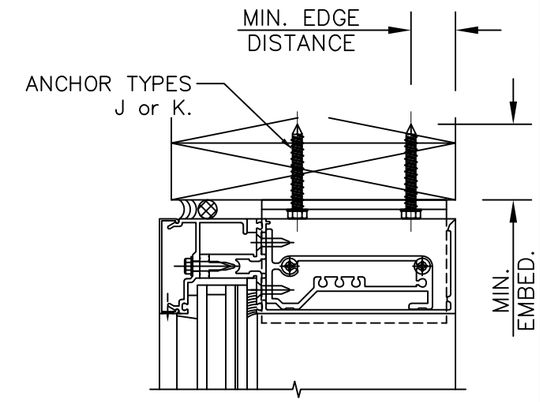

IN WOOD

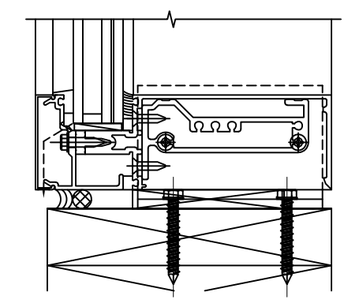

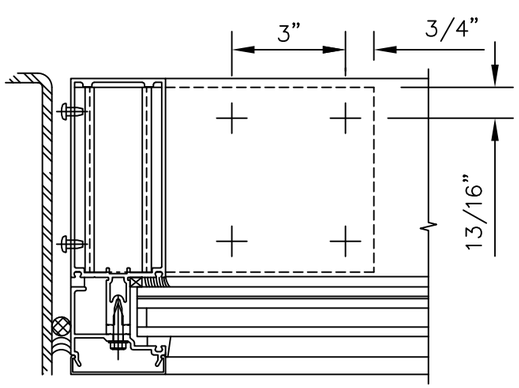

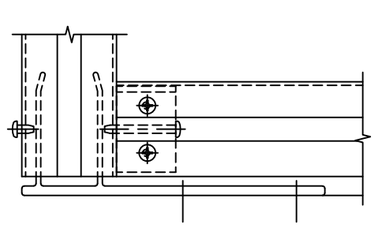

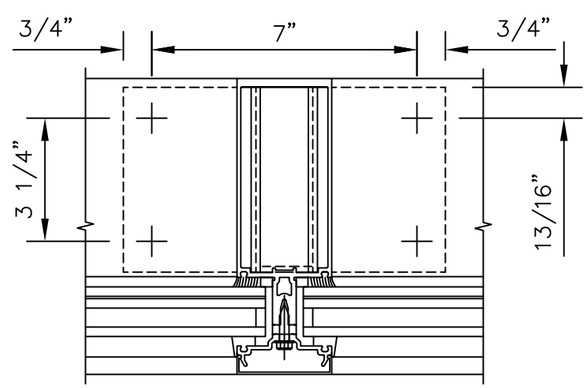

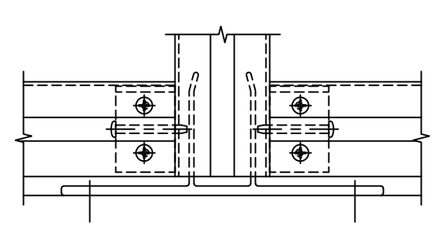

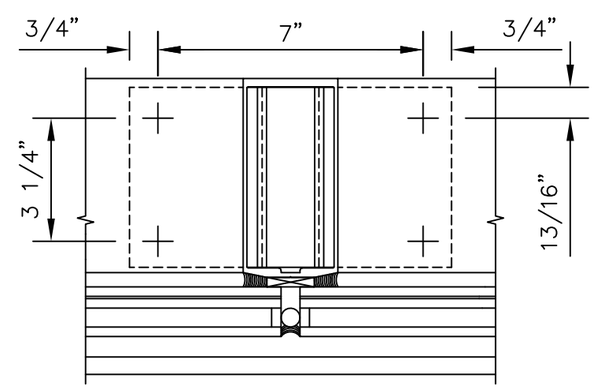

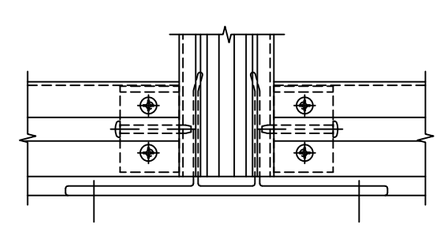

CORNER ANCHORS ARE SIMILAR

REV.#	DATE	REVISION
–	12/16/24	–
–	10/15/23	2023 CODE UPDATE
–	10/12/20	1ST SUBMITTAL
–	–	PRINTS ISSUED FOR

KAWNEER
AN ARCONIC COMPANY
555 GUTHRIDGE COURT
NORCROSS, GA 30092
PH: (770) 449-5555
WWW.KAWNEER.COM

SEAL:

SCOTT WOLTERS
FL PE# 62354

WOLTERS ENGINEERING
(COA# 27194)
15211 97TH ROAD N
WEST PALM BEACH, FL 33412
(561) 225-1982

PRODUCT: 1600 WALL SYSTEM 1 & 2

DWG: 1600-IR-HVHZ

SECTION: 6

SHEET: 29/42

HEAD/SILL ANCHOR DETAILS

SEE CHART ON SHEET 31 FOR FASTENER & SUBSTRATE INFORMATION.

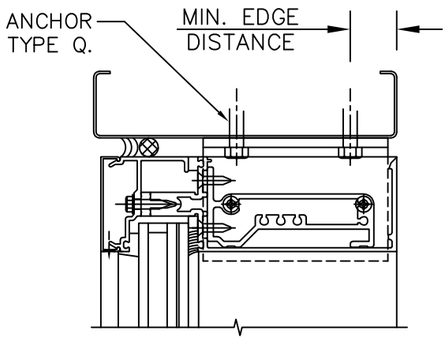

IN METAL STUD

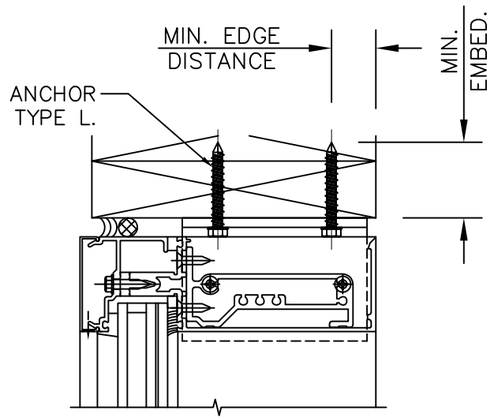

IN WOOD

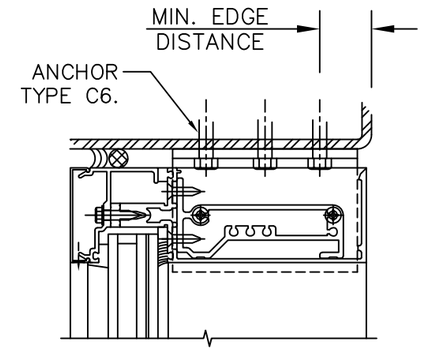

IN STEEL

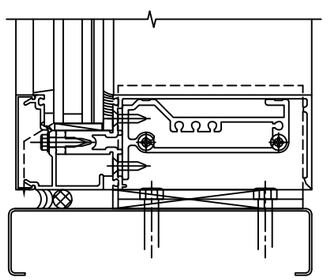

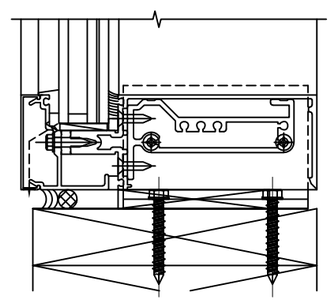

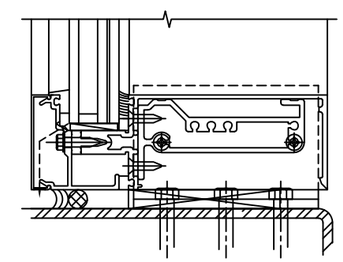

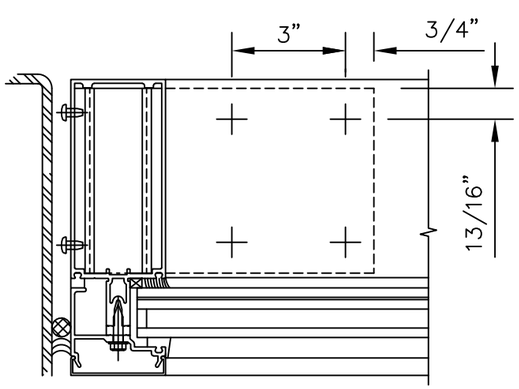

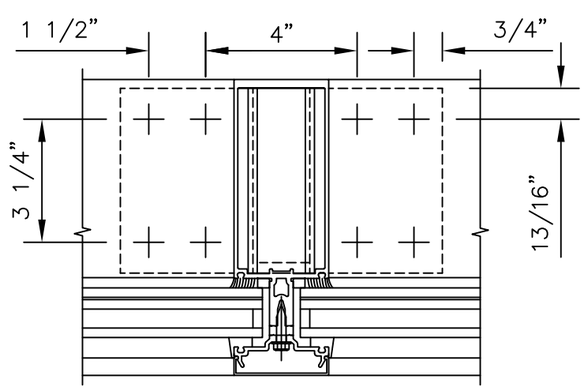

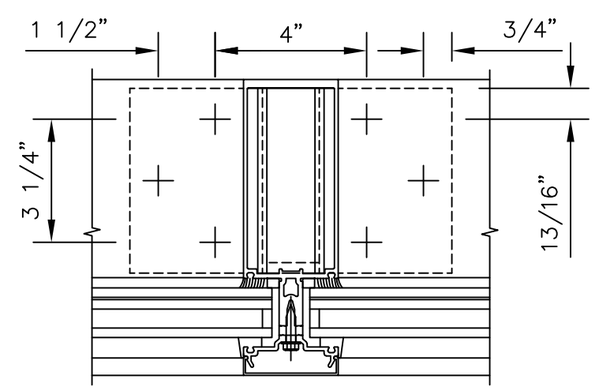

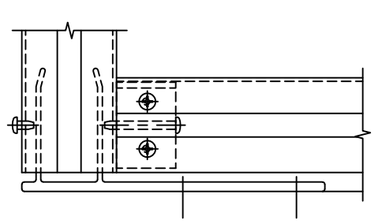

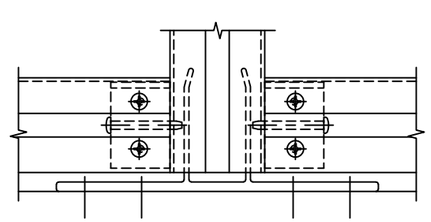

SSG MULLION ANCHORS AND CORNER ANCHORS ARE SIMILAR

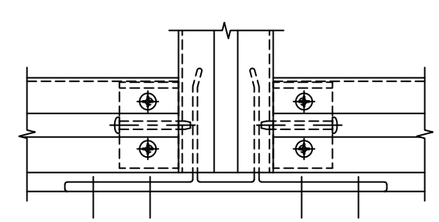

REV.#	DATE	REVISION
–	12/16/24	REVISION
–	10/15/23	2023 CODE UPDATE
–	10/12/20	1ST SUBMITTAL
–	–	PRINTS ISSUED FOR

KAWNEER
AN ARCONIC COMPANY
555 GUTHRIDGE COURT
NORCROSS, GA 30092
PH: (770) 449-5555
WWW.KAWNEER.COM

SEAL:

SCOTT WOLTERS
FL PE# 62354

WOLTERS ENGINEERING
(COA# 27194)
15211 97TH ROAD N
WEST PALM BEACH, FL 33412
(561) 225-1982

PRODUCT: 1600 WALL SYSTEM 1 & 2

DWG: 1600-IR-HVHZ

SECTION: 6

SHEET: 30/42

HEAD/SILL ANCHOR CHARTS

ANCHOR CHART AND ALLOWABLE LOADS AT SINGLE-SPAN MULLIONS

HEAD/SILL ANCHORS							
SUBSTRATE	MARK	TYPE	QUANTITY MULLION	QUANTITY JAMB	MIN EMBED (in)	MIN EDGE DISTANCE (in)	MAX. END REACTION (lb)
STRUCTURAL STEEL (1/4", A36 min)	A2	3/8" DIA. F-TYPE SCREW[4] or BOLT (Fu=120 ksi min)[4]	2	2	FULL*	3/4"	2175 lb.
	A4	3/8" DIA. F-TYPE SCREW[4] or BOLT (Fu=120 ksi min)[4]	4	2	FULL*	3/4"	3150 lb.
	B	1/2" DIA. F-TYPE SCREW[5] or BOLT (Fu=120 ksi min)[5]	2	2	FULL*	1"	3710 lb.
	C4	5/16"-24 DEWALT DRIL-FLEX	4	4	FULL*	1/2"	3150 lb.
	C6	5/16"-24 DEWALT DRIL-FLEX	6	4	FULL*	3/4"	3710 lb.
CONCRETE (4000 psi min)	E1	3/8" DIA. WEDGE -TYPE CONCRETE ANCHOR[1]	2	2	3 1/2"	4 1/2"	2625 lb.
	E2					2 1/2"	1800 lb.
	F1	1/2" DIA. WEDGE-TYPE CONCRETE ANCHOR[1]	2	2	3 1/2"	6"	2900 lb.
	F2					3"	1990 lb.
	G1	1/2" DIA. STUD -TYPE CONCRETE ANCHOR[2]	2	2	3 1/2"	6"	2625 lb.
	G2					3 1/2"	1800 lb.
	H1	1/2" DIA. SLEEVE -TYPE CONCRETE ANCHOR[3]	2	2	3 1/2"	6"	2645 lb.
	H2					3 1/2"	1550 lb.
WOOD (S.G.=0.55 min)	J	3/8" DIA. LAG SCREW (Fu=75 ksi min)[4]	4	2	2 1/2"	1 7/8"	1660 lb.
	K	5/16" DEWALT ULTRACON	4	4	2"	1 5/8"	1675 lb.
	L	1/4" DIA. SELF-DRILLING SCREW[6] or DEWALT ULTRACON	8	4	1 1/2"	1 1/4"	2175 lb.
STRUCTURAL STEEL (1/8", A36 min)	M	1/4" DIA. SELF-DRILLING[6] or F-TYPE SCREW (Fu=120 ksi min)[4]	4	4	FULL*	1/2"	2175 lb.
CONCRETE (3500 psi min)	N1	5/16" DIA. DEWALT ULTRACON	4	4	1 3/4"	3 1/8"	1800 lb.
	N2					2 1/2"	1580 lb.
CONCRETE (3050 psi min)	P1	1/4" DIA. DEWALT ULTRACON	4	4	1 3/4"	2 1/2"	1400 lb.
	P2					1 3/4"	1050 lb.
METAL STUD (16 Ga, 45 ksi min)	Q	1/4" DIA. SELF-DRILLING SCREW (Fu=120 ksi min)[6]	8	4	FULL*	1/2"	2100 lb.
	R	1/4" DIA. SELF-DRILLING SCREW (Fu=120 ksi min)[6]	4	4	FULL*	1/2"	1450 lb.

ANCHOR NOTES:

1. WEDGE-TYPE ANCHORS INCLUDE DeWALT SCREW-BOLT+, HILTI KWIK HUS-EZ, AND SIMPSON STRONG-TIE TITAN HD.
2. STUD-TYPE ANCHORS INCLUDE DeWALT POWER-STUD+SD1, HILTI KWIK BOLT 3, AND SIMPSON STRONG-TIE STRONG-BOLT 2.
3. SLEEVE-TYPE ANCHORS INCLUDE DeWALT POWER-BOLT+, HILTI HSL-3, AND SIMPSON STRONG-TIE SLEEVE-ALL.

* FOR FASTENERS IN STEEL, FASTENER THREADS MUST FULLY PENETRATE THE WALL THICKNESS OF THE STEEL, WITH THREE ADDITIONAL THREADS BEYOND.

CORROSION RESISTANCE NOTES:

WITHIN 3000 ft OF A SALTWATER COASTLINE:

1. WEDGE-TYPE ANCHORS INCLUDE KWIK HUS-EZ SS316, MECHANICALLY GALVANIZED SIMPSON STRONG-TIE TITAN HD, OR STAINLESS STEEL SIMPSON STRONG-TIE TITAN HD.
2. STUD-TYPE ANCHORS INCLUDE HILTI KWIK BOLT 3 STAINLESS STEEL, HILTI KWIK-BOLT 3 HOT-DIP GALVANIZED, SIMPSON STRONG-TIE STAINLESS STEEL STRONG-BOLT 2, OR SIMPSON STRONG-TIE MECHANICALLY GALVANIZED STRONG-BOLT 2.
3. SLEEVE-TYPE ANCHORS INCLUDE DEWALT STAINLESS STEEL POWER-BOLT OR HILTI HSL-3 STAINLESS STEEL.
4. FASTENERS MUST BE EITHER:
   A. GALVANIZED TO MEET ASTM A153, CLASS C.
   B. GALVANIZED TO MEET ASTM A641 CLASS 3S.
   C. COATED TO EXHIBIT <5% RED RUST AFTER 1000 HOURS OF EXPOSURE PER ASTM B117
   D. 300 SERIES STAINLESS STEEL (Fu=100 ksi min).
5. FASTENERS MUST BE EITHER:
   A. GALVANIZED TO MEET ASTM A153, CLASS C.
   B. 300 SERIES STAINLESS STEEL (Fu=100 ksi min).
6. USE DEWALT DRIL-FLEX, DEWALT BI-FLEX, OR OTHER FASTENER MEETING THE REQUIREMENTS OF NOTE #4 ABOVE.

ANCHOR CONFIGURATIONS A4, B, & C6 ARE APPROVED FOR ALL MULLION SIZES & PRESSURES SHOWN IN THE MULLION CHARTS ON SHEETS 14,15,19.

HEAD/SILL ANCHORS - ALLOWABLE DESIGN PRESSURES

DESIGN PRESSURES FOR SINGLE SPAN MULLIONS (psf) — ANCHOR CONFIGURATION

MULLION HEIGHT (in)	MULLION WIDTH (in)	A2	C4	E1	E2	F1	F2	G1	G2	H1	H2	J	K	L	M	N1	N2	P1	P2	Q	R
72	61	130	130	130.0	118.0	130	130	130	118.0	130	101.6	108.9	109.8	130	130	118.0	103.6	91.8	68.9	130	95.1
	72	110.1	110.1	110.1	100.0	110.1	110.1	110.1	100.0	110.1	86.1	92.2	93.1	110.1	110.1	100.0	87.8	77.8	58.3	110.1	80.6
	84	94.4	94.4	94.4	85.7	94.4	94.4	94.4	85.7	94.4	73.8	79.0	79.8	94.4	94.4	85.7	75.2	66.7	50.0	94.4	69.0
	96	82.6	82.6	82.6	75.0	82.6	82.6	82.6	75.0	82.6	64.6	69.2	69.8	82.6	82.6	75.0	65.8	58.3	43.8	82.6	60.4
84	54	127.5	127.5	127.5	114.3	127.5	126.3	127.5	114.3	127.5	98.4	105.4	106.3	127.5	127.5	114.3	100.3	88.9	66.7	127.5	92.1
	61	127.5	127.5	127.5	101.2	127.5	111.9	127.5	101.2	127.5	87.1	93.3	94.1	122.2	122.2	101.2	88.8	78.7	59.0	118	81.5
	72	108	108	108.0	85.7	108	94.8	108	85.7	108	73.8	79.0	79.8	103.6	103.6	85.7	75.2	66.7	50.0	100	69.0
	83	93.7	93.7	93.7	74.4	93.7	82.2	93.7	74.4	93.7	64.0	68.6	69.2	89.8	89.8	74.4	65.3	57.8	43.4	86.7	59.9
	96	77.7	81	81.0	64.3	81	71.1	81	64.3	81	55.4	59.3	59.8	77.7	77.7	64.3	56.4	50.0	37.5	75	51.8
96	54	120.8	125	125.0	100.0	125	110.6	125	100.0	125	86.1	92.2	93.1	120.8	120.8	100.0	87.8	77.8	58.3	116.7	80.6
	61	107.0	125	125.0	88.5	125	97.9	125	88.5	125	76.2	81.6	82.4	107.0	107.0	88.5	77.7	68.9	51.6	103.3	71.3
	72	90.6	105.9	105.9	75.0	105.9	82.9	105.9	75.0	105.9	64.6	69.2	69.8	90.6	90.6	75.0	65.8	58.3	43.8	87.5	60.4
	84	77.7	90.8	90.8	64.3	90.8	71.1	90.8	64.3	90.8	55.4	59.3	59.8	77.7	77.7	64.3	56.4	50.0	37.5	75.0	51.8
	96	68.0	79.4	79.4	56.3	79.4	62.2	79.4	56.3	79.4	48.4	51.9	52.3	68.0	68.0	56.3	49.4	43.8	32.8	65.6	45.3
114	61	90.1	127	108.7	74.5	120.1	82.4	108.7	74.5	109.5	64.2	68.7	69.4	90.1	90.1	74.5	65.4	58.0	43.5	87.0	60.1
	72	76.3	110.5	92.1	63.2	101.8	69.8	92.1	63.2	92.8	54.4	58.2	58.8	76.3	76.3	63.2	55.4	49.1	36.8	73.7	50.9
	85	64.6	93.6	78.0	53.5	86.2	59.1	78	53.5	78.6	46.1	49.3	49.8	64.6	64.6	53.5	47.0	41.6	31.2	62.4	43.1
	88 1/2	62.1	89.9	74.9	51.4	82.8	56.8	74.9	51.4	75.5	44.2	47.4	47.8	62.1	62.1	51.4	45.1	40.0	30.0	59.9	41.4
	96	57.2	82.9	69.1	47.4	76.3	52.4	69.1	47.4	69.6	40.8	43.7	44.1	57.2	57.2	47.4	41.6	36.8	27.6	55.3	38.2
123	48	106.1	127.0	127.0	87.8	127	97.1	127	87.8	127.0	75.6	81.0	81.7	106.1	106.1	87.8	77.1	68.3	51.2	102.4	70.7
	52	97.9	127.0	118.2	81.1	127	89.6	118.2	81.1	119.1	69.8	74.7	75.4	97.9	97.9	81.1	71.1	63.0	47.3	94.6	65.3
	56 3/8	90.3	127.0	109.0	74.8	120.4	82.7	109	74.8	109.9	64.4	68.9	69.6	90.3	90.3	74.8	65.6	58.1	43.6	87.2	60.2
	60	84.9	122.9	102.4	70.2	113.2	77.7	102.4	70.2	103.2	60.5	64.8	65.4	84.9	84.9	70.2	61.7	54.6	41.0	82.0	56.6
	68 3/8	74.5	107.9	89.9	61.6	99.3	68.1	89.9	61.6	90.6	53.1	56.8	57.4	74.5	74.5	61.6	54.1	47.9	36.0	71.9	49.7
	78 3/4	64.7	93.7	78.0	53.5	86.2	59.2	78	53.5	78.6	46.1	49.4	49.8	64.7	64.7	53.5	47.0	41.6	31.2	62.4	43.1
	82	62.1	89.9	75.0	51.4	82.8	56.8	75	51.4	75.5	44.3	47.4	47.8	62.1	62.1	51.4	45.1	40.0	30.0	60.0	41.4
	86 1/2	58.9	85.3	71.1	48.7	78.5	53.9	71.1	48.7	71.6	42.0	44.9	45.3	58.9	58.9	48.7	42.8	37.9	28.4	56.8	39.2
	96	53.0	76.8	64.0	43.9	70.7	48.5	64	43.9	64.5	37.8	40.5	40.9	53.0	53.0	43.9	38.5	34.1	25.6	51.2	35.4
132	42	113.0	127.0	127.0	93.5	127	103.4	127	93.5	127.0	80.5	86.2	87.0	113.0	113.0	93.5	82.1	72.7	54.5	109.1	75.3
	48	98.9	127.0	119.3	81.8	127	90.5	119.3	81.8	120.2	70.5	75.5	76.1	98.9	98.9	81.8	71.8	63.6	47.7	95.5	65.9
	52 1/2	90.4	127.0	109.1	74.8	127	82.7	109.1	74.8	109.9	64.4	69.0	69.6	90.4	90.4	74.8	65.7	58.2	43.6	87.3	60.3
	60	79.1	114.4	95.5	65.5	105.5	72.4	95.5	65.5	96.2	56.4	60.4	60.9	79.1	79.1	65.5	57.5	50.9	38.2	76.4	52.7
	66	71.9	104.0	86.8	59.5	95.9	65.8	86.8	59.5	87.4	51.2	54.9	55.4	71.9	71.9	59.5	52.2	46.3	34.7	69.4	47.9
	73 1/2	64.6	93.5	77.9	53.4	86.1	59.1	77.9	53.4	78.5	46.0	49.3	49.7	64.6	64.6	53.4	46.9	41.6	31.2	62.3	43.0
	76 1/4	62.2	90.1	75.1	51.5	83	56.9	75.1	51.5	75.7	44.4	47.5	47.9	62.2	62.2	51.5	45.2	40.1	30.0	60.1	41.5
	80 1/2	58.9	85.4	71.1	48.8	78.6	53.9	71.1	48.8	71.7	42.0	45.0	45.4	58.9	58.9	48.8	42.8	37.9	28.5	56.9	39.3
	88	53.9	74.0	65.1	44.6	71.9	49.3	65.1	44.6	65.6	38.4	41.2	41.5	53.9	53.9	44.6	39.2	34.7	26.0	52.1	36.0
	96	49.4	65.8	59.7	40.9	65.8	45.2	59.7	40.9	60.1	35.2	37.7	38.1	49.4	49.4	40.9	35.9	31.8	23.9	47.7	33.0
147	36	118.4	127.0	127.0	98.0	127	108.3	127	98.0	127.0	84.4	90.3	91.2	118.4	118.4	98.0	86.0	76.2	57.1	114.3	78.9
	42	101.5	127.0	122.4	84.0	127	92.8	122.4	84.0	123.4	72.3	77.4	78.1	101.5	101.5	84.0	73.7	65.3	49.0	98.0	67.6
	47	90.7	127.0	109.4	75.0	120.9	83.0	109.4	75.0	110.3	64.6	69.2	69.8	90.7	90.7	75.0	65.9	58.4	43.8	87.5	60.4
	60	71.0	102.9	85.7	58.8	94.7	65.0	85.7	58.8	86.4	50.6	54.2	54.7	71.0	71.0	58.8	51.6	45.7	34.3	68.6	47.3
	66	64.6	93.5	77.9	53.4	86.1	59.1	77.9	53.4	78.5	46.0	49.3	49.7	64.6	64.6	53.4	46.9	41.6	31.2	62.3	43.0
	68 5/8	62.1	89.9	74.9	51.4	82.8	56.8	74.9	51.4	75.5	44.3	47.4	47.8	62.1	62.1	51.4	45.1	40.0	30.0	60.0	41.4
	72 1/4	59.0	85.0	71.2	48.8	78.6	54.0	71.2	48.8	71.7	42.0	45.0	45.4	59.0	59.0	48.8	42.8	38.0	28.5	56.9	39.3
	80	53.3	74.4	64.3	44.1	71	48.7	64.3	44.1	64.8	38.0	40.7	41.0	53.3	53.3	44.1	38.7	34.3	25.7	51.4	35.5
	89	47.9	62.0	57.8	39.6	62	43.8	57.8	39.6	58.2	34.1	36.5	36.9	47.9	47.9	39.6	34.8	30.8	23.1	46.2	31.9
156	36	111.5	127.0	127.0	92.3	127	102.1	127	92.3	127.0	79.5	85.1	85.9	111.5	111.5	92.3	81.0	71.8	53.8	107.7	74.4
	41 1/4	97.3	126.2	117.5	80.6	126.2	89.1	117.5	80.6	118.4	69.4	74.3	75.0	97.3	97.3	80.6	70.7	62.7	47.0	94.0	64.9
	44 1/2	90.2	117.0	108.9	74.7	117	82.6	108.9	74.7	109.7	64.3	68.9	69.5	90.2	90.2	74.7	65.5	58.1	43.6	87.1	60.2
	54	74.4	96.4	89.7	61.5	96.4	68.0	89.7	61.5	90.4	53.0	56.8	57.3	74.4	74.4	61.5	54.0	47.9	35.9	71.8	49.6
	62	64.8	84.0	78.2	53.6	84	59.3	78.2	53.6	78.8	46.2	49.4	49.9	64.8	64.8	53.6	47.0	41.7	31.3	62.5	43.2
	64 1/2	62.3	80.7	75.1	51.5	80.7	57.0	75.1	51.5	75.7	44.4	47.5	47.9	62.3	62.3	51.5	45.2	40.1	30.1	60.1	41.5
	72	55.8	72.3	67.3	46.2	72.3	51.0	57.3	46.2	67.8	39.7	42.6	42.9	55.8	55.8	46.2	40.5	35.9	26.9	53.8	37.2
	84	47.8	62.0	57.7	39.6	62	43.7	57.7	39.6	58.1	34.1	36.5	36.8	47.8	47.8	39.6	34.7	30.8	23.1	46.2	31.9
168	36	103.6	124.9	124.9	85.7	124.9	94.8	124.9	85.7	124.9	73.8	79.0	79.8	103.6	103.6	85.7	75.2	66.7	50.0	100.0	69.0
	41	90.9	109.6	109.8	75.3	109.6	83.2	109.6	75.3	109.6	64.8	69.4	70.0	90.9	90.9	75.3	66.1	58.5	43.9	87.8	60.6
	50	74.6	89.9	89.9	61.7	89.9	68.2	89.9	61.7	89.9	53.1	56.9	57.4	74.6	74.6	61.7	54.2	48.0	36.0	72.0	49.7
	57 1/2	64.8	78.2	78.2	53.7	78.2	59.3	78.2	53.7	78.2	46.2	49.5	49.9	64.8	64.8	53.7	47.1	41.7	31.3	62.6	43.2
	60	62.1	74.9	74.9	51.4	74.9	56.9	74.9	51.4	74.9	44.3	47.4	47.9	62.1	62.1	51.4	45.1	40.0	30.0	60.0	41.4
	69	54.0	65.1	65.1	44.7	65.1	49.4	65.1	44.7	65.1	38.5	41.2	41.6	54.0	54.0	44.7	39.3	34.8	26.1	52.2	36.0
	78	47.8	57.6	57.6	39.6	57.6	43.7	57.6	39.6	57.6	34.1	36.5	36.8	47.8	47.8	39.6	34.7	30.8	23.1	46.2	31.9
174	37	97.3	117.3	117.3	80.5	117.3	89.0	117.3	80.5	117.3	69.3	74.3	74.9	97.3	97.3	80.5	70.7	62.6	47.0	93.9	64.9
	48	75.0	90.4	90.4	62.1	90.4	68.6	90.4	62.1	90.4	53.4	57.2	57.8	75.0	75.0	62.1	54.5	48.3	36.2	72.4	50.0
	55 1/2	64.9	78.2	78.2	53.7	78.2	59.3	78.2	53.7	78.2	46.2	49.5	50.0	64.9	64.9	53.7	47.1	41.8	31.3	62.6	43.2
	58	62.1	74.8	74.8	51.4	74.8	56.8	74.8	51.4	74.8	44.2	47.4	47.8	62.1	62.1	51.4	45.1	40.0	30.0	59.9	41.4
	66 1/2	54.1	65.2	65.2	44.8	65.2	49.5	65.2	44.8	65.2	38.6	41.3	41.7	54.1	54.1	44.8	39.3	34.8	26.1	52.3	36.1
	75 1/4	47.8	57.6	57.6	39.6	57.6	43.8	57.6	39.6	57.6	34.1	36.5	36.8	47.8	47.8	39.6	34.8	30.8	23.1	46.2	31.9
183	35 5/16	96.9	116.8	116.8	80.2	116.8	88.7	116.8	80.2	116.8	69.1	74.0	74.6	96.9	96.9	80.2	70.4	62.4	46.8	93.6	64.6
	42	81.5	98.2	98.2	67.4	98.2	74.6	98.2	67.4	98.2	58.1	62.2	62.8	81.5	81.5	67.4	59.2	52.5	39.3	78.7	54.3
	46 1/4	74.0	89.2	89.2	61.2	89.2	67.7	89.2	61.2	89.2	52.7	56.5	57.0	74.0	74.0	61.2	53.8	47.6	35.7	71.5	49.3
	53	64.6	77.8	77.8	53.4	77.8	59.1	77.8	53.4	77.8	46.0	49.3	49.7	64.6	64.6	53.4	46.9	41.6	31.2	62.4	43.1
	55	62.2	75	75.0	51.5	75	56.9	75	51.5	75	44.4	47.5	47.9	62.2	62.2	51.5	45.2	40.1	30.0	60.1	41.5
	58 1/8	58.9	**71**	71.0	48.7	71	53.9	71	48.7	71	42.0	44.9	45.4	58.9	58.9	48.7	42.8	37.9	28.4	56.9	39.3
	63	54.3	65.5	65.5	45.0	65.5	49.7	65.5	45.0	65.5	38.7	41.5	41.8	54.3	54.3	45.0	39.5	35.0	26.2	52.5	36.2
	71 1/2	47.9	57.7	57.7	39.6	57.7	43.8	57.7	39.6	57.7	34.1	36.5	36.9	47.9	47.9	39.6	34.8	30.8	23.1	46.2	31.9
195	36	89.2	94.7	94.7	73.8	94.7	81.6	94.7	73.8	94.7	63.6	68.1	68.7	89.2	89.2	73.8	64.8	57.4	43.1	86.2	59.5
	43	74.7	79.3	79.3	61.8	79.3	68.4	79.3	61.8	79.3	53.2	57.0	57.5	74.7	74.7	61.8	54.3	48.1	36.1	72.1	49.8
	49 1/2	64.9	68.9	68.9	53.7	68.9	59.4	68.9	53.7	68.9	46.2	49.5	50.0	64.9	64.9	53.7	47.1	41.8	31.3	62.7	43.3
	51 1/2	62.4	66.2	66.2	51.6	66.2	57.1	66.2	51.6	66.2	44.5	47.6	48.0	62.4	62.4	51.6	45.3	40.1	30.1	60.2	41.6
	59 1/2	54.0	57.3	57.3	44.7	57.3	49.4	57.3	44.7	57.3	38.5	41.2	41.6	54.0	54.0	44.7	39.2	34.8	26.1	52.1	36.0
	67	47.9	50.9	50.9	39.7	50.9	43.9	50.9	39.7	50.9	34.2	36.6	36.9	47.9	47.9	39.7	34.8	30.9	23.1	46.3	32.0
199	36	87.4	89.1	89.1	72.4	89.1	80.0	89.1	72.4	89.1	62.3	66.7	67.3	87.4	87.4	72.4	63.5	56.3	42.2	84.4	58.3
	42	74.9	76.4	76.4	62.0	76.4	68.6	76.4	62.0	76.4	53.4	57.2	57.7	74.9	74.9	62.0	54.4	48.2	36.2	72.4	50.0
	48 3/4	64.6	65.8	65.8	53.4	65.8	59.1	65.8	53.4	65.8	46.0	49.3	49.7	64.6	64.6	53.4	46.9	41.6	31.2	62.3	43.0
	50 1/2	62.3	63.5	63.5	51.6	63.5	57.0	63.5	51.6	63.5	44.4	47.6	48.0	62.3	62.3	51.6	45.3	40.1	30.1	60.2	41.6
	54 5/16	58.0	59.1	59.1	48.0	59.1	53.0	59.1	48.0	59.1	41.3	44.2	44.6	58.0	58.0	48.0	42.1	37.3	28.0	56.0	38.6
	60	52.5	53.5	53.5	43.4	53.5	48.0	53.5	43.4	53.5	37.4	40.0	40.4	52.5	52.5	43.4	38.1	33.8	25.3	50.7	35.0
	65 3/4	47.9	48.8	48.8	39.6	48.8	43.8	48.8	39.6	48.8	34.1	36.5	36.9	47.9	47.9	39.6	34.8	30.8	23.1	46.2	31.9
204	36	82.7	82.7	82.7	70.6	82.7	78.0	82.7	70.6	82.7	60.8	65.1	65.7	82.7	82.7	70.6	62.0	54.9	41.2	82.4	56.9
	42	70.9	70.9	70.9	60.5	70.9	66.9	70.9	60.5	70.9	52.1	55.8	56.3	70.9	70.9	60.5	53.1	47.1	35.3	70.6	48.7
	47 1/2	62.7	62.7	62.7	53.5	62.7	59.1	62.7	53.5	62.7	46.1	49.3	49.8	62.7	62.7	53.5	47.0	41.6	31.2	62.4	43.1
	49 1/2	60.2	60.2	60.2	51.3	60.2	56.8	60.2	51.3	60.2	44.2	47.3	47.8	60.2	60.2	51.3	45.1	39.9	29.9	59.9	41.4
	56 3/4	52.5	52.5	52.5	44.8	52.5	49.5	52.5	44.8	52.5	38.6	41.3	41.7	52.5	52.5	44.8	39.3	34.8	26.1	52.2	36.1
	64 1/4	46.3	46.3	46.3	39.6	46.3	43.7	46.3	39.6	46.3	34.1	36.5	36.8	46.3	46.3	39.6	34.7	30.8	23.1	46.1	31.9
216	36	69.7	69.7	69.7	66.7	69.7	69.7	69.7	66.7	69.7	57.4	61.5	62.0	69.7	69.7	66.7	58.5	51.9	38.9	69.7	53.7
	42	59.7	59.7	59.7	57.1	59.7	59.7	59.7	57.1	59.7	49.2	52.7	53.2	59.7	59.7	57.1	50.2	44.4	33.3	59.7	46.0
	44 3/4	56.1	56.1	56.1	53.6	56.1	56.1	56.1	53.6	56.1	46.2	49.5	49.9	56.1	56.1	53.6	47.1	41.7	31.3	56.1	43.2
	46 1/2	54	54	54	51.6	54	54	54	51.6	54	44.4	47.6	48.0	54	54	51.6	45.3	40.1	30.1	54	41.6
	54	46.5	46.5	46.5	44.4	46.5	46.5	46.5	44.4	46.5	38.3	41.0	41.4	46.5	46.5	44.4	39.0	34.6	25.9	46.5	35.8
	60 1/2	41.5	41.5	41.5	39.7	41.5	41.5	41.5	39.7	41.5	34.2	36.6	36.9	41.5	41.5	39.7	34.8	30.9	23.1	41.5	32.0

DATE	REV.#	PRINTS ISSUED FOR
8/17/26	–	CODE UPDATE
12/16/24	–	REVISION
10/15/23	–	2023 CODE UPDATE
10/12/20	–	1ST SUBMITTAL

KAWNEER
AN ARCONIC COMPANY
555 GUTHRIDGE COURT
NORCROSS, GA 30092
PH: (770) 449-5555
WWW.KAWNEER.COM

SEAL:

SCOTT WOLTERS LICENSE No 62354 STATE OF FLORIDA PROFESSIONAL ENGINEER
AUG 17, 2026

SCOTT WOLTERS
FL PE# 62354

WOLTERS ENGINEERING
(COA# 27194)
15211 97TH ROAD N
WEST PALM BEACH, FL 33412
(561) 225-1982

PRODUCT: 1600 WALL SYSTEM 1 & 2

DWG: 1600-IR-HVHZ

SECTION: 6

HEAD/SILL ANCHOR CHARTS

ALLOWABLE LOADS FOR HEAD/SILL ANCHORS AT MULTI-SPAN MULLIONS WITH EQUAL SPANS.

HEAD/SILL ANCHORS - ALLOWABLE DESIGN PRESSURES

DESIGN PRESSURES FOR MULTI-SPAN MULLIONS WITH EQUAL SPANS (pdf)

ANCHOR CONFIGURATION

MULLION HEIGHT (in)	MULLION WIDTH (in)	A2	E1	E2	G1	G2	H1	H2	J	K	L	M	N1	N2	P1	P2	Q	R
144	62	90.0	90.0	77.4	90.0	77.4	90.0	66.7	71.4	72.0	90.0	90.0	77.4	68.0	60.2	45.2	90.0	62.4
	66	87.9	90.0	72.7	90.0	72.7	90.0	62.6	67.1	67.7	87.9	87.9	72.7	63.8	56.6	42.4	84.8	58.6
	73	79.5	95.9	65.8	95.9	65.8	96.8	56.6	60.6	61.2	79.5	79.5	65.8	57.7	51.1	38.4	76.7	53.0
	84	69.0	83.3	57.1	83.3	57.1	84.1	49.2	52.7	53.2	69.0	69.0	57.1	50.2	44.4	33.3	66.7	46.0
	96	60.4	72.9	50.0	72.9	50.0	73.6	43.1	46.1	46.5	60.4	60.4	50.0	43.9	38.9	29.2	58.3	40.3
156	60	89.2	90.0	73.8	90.0	73.8	90.0	63.6	68.1	68.7	89.2	89.2	73.8	64.8	57.4	43.1	86.2	59.5
	67	79.9	90.0	66.1	90.0	66.1	90.0	56.9	61.0	61.5	79.9	79.9	66.1	58.0	51.4	38.6	77.2	53.3
	71	75.4	90.0	62.4	90.0	62.4	90.0	53.7	57.6	58.1	75.4	75.4	62.4	54.8	48.5	36.4	72.8	50.3
	78	68.6	82.8	56.8	82.8	56.8	83.6	48.9	52.4	52.9	68.6	68.6	56.8	49.9	44.2	33.1	66.3	45.8
	85	63.0	76.0	52.1	76.0	52.1	76.7	44.9	48.1	48.5	63.0	63.0	52.1	45.8	40.5	30.4	60.8	42.0
	90	59.5	71.8	49.2	71.8	49.2	72.5	42.4	45.4	45.8	59.5	59.5	49.2	43.2	38.3	28.7	57.4	39.7
	96	55.8	67.3	46.2	67.3	46.2	67.9	39.7	42.6	42.9	55.8	55.8	46.2	40.5	35.9	26.9	53.8	37.2
168	66	75.3	90.0	62.3	90.0	62.3	90.0	53.7	57.5	58.0	75.3	75.3	62.3	54.7	48.5	36.4	72.7	50.2
	72	69.0	83.3	57.1	83.3	57.1	84.1	49.2	52.7	53.2	69.0	69.0	57.1	50.2	44.4	33.3	66.7	46.0
	79	62.9	75.9	52.1	75.9	52.1	76.7	44.8	48.0	48.5	62.9	62.9	52.1	45.7	40.5	30.4	60.8	42.0
	84	59.2	71.4	49.0	71.4	49.0	72.1	42.2	45.2	45.6	59.2	59.2	49.0	43.0	38.1	28.6	57.1	39.5
	90	55.2	66.7	45.7	66.7	45.7	67.3	39.4	42.2	42.5	55.2	55.2	45.7	40.1	35.6	26.7	53.3	36.8
	96	51.8	62.5	42.9	62.5	42.9	63.1	36.9	39.5	39.9	51.8	51.8	42.9	37.6	33.3	25.0	50.0	34.5
180	49 1/2	90.0	90.0	77.6	90.0	77.6	90.0	66.8	71.5	72.2	90.0	90.0	77.6	68.1	60.3	45.3	90.5	62.5
	58	80.0	90.0	66.2	90.0	66.2	90.0	57.0	61.1	61.6	80.0	80.0	66.2	58.1	51.5	38.6	77.2	53.3
	61	76.1	90.0	63.0	90.0	63.0	90.0	54.2	58.1	58.6	76.1	76.1	63.0	55.3	49.0	36.7	73.4	50.7
	68	68.2	82.4	56.5	82.4	56.5	83.1	48.6	52.1	52.5	68.2	68.2	56.5	49.6	43.9	32.9	65.9	45.5
	74	62.7	75.7	51.9	75.7	51.9	76.4	44.7	47.9	48.3	62.7	62.7	51.9	45.5	40.4	30.3	60.5	41.8
	80	58.0	70.0	48.0	70.0	48.0	70.7	41.3	44.3	44.7	58.0	58.0	48.0	42.1	37.3	28.0	56.0	38.7
	89	52.1	62.9	43.1	62.9	43.1	63.5	37.2	39.8	40.1	52.1	52.1	43.1	37.9	33.6	25.2	50.3	34.8
187	48	90.0	90.0	77.0	90.0	77.0	90.0	66.3	71.0	71.7	90.0	90.0	77.0	67.6	59.9	44.9	89.8	62.0
	54	82.7	90.0	68.4	90.0	68.4	90.0	58.9	63.1	63.7	82.7	82.7	68.4	60.1	53.2	39.9	79.9	55.1
	59	75.7	90.0	62.6	90.0	62.6	90.0	53.9	57.8	58.3	75.7	75.7	62.6	55.0	48.7	36.5	73.1	50.5
	66	67.7	81.7	56.0	81.7	56.0	82.5	48.2	51.6	52.1	67.7	67.7	56.0	49.2	43.6	32.7	65.3	45.1
	71	62.9	75.9	52.1	75.9	52.1	76.6	44.8	48.0	48.4	62.9	62.9	52.1	45.7	40.5	30.4	60.7	41.9
	78	57.3	69.1	47.4	69.1	47.4	69.8	40.8	43.7	44.1	57.3	57.3	47.4	41.6	36.9	27.6	55.3	38.2
	86	50.6	61.0	41.9	61.0	41.9	61.6	36.0	38.6	39.0	50.6	50.6	41.9	36.7	32.6	24.4	48.8	33.7
192	48	90.0	90.0	75.0	90.0	75.0	90.0	64.6	69.2	69.8	90.0	90.0	75.0	65.8	58.3	43.8	87.5	60.4
	54	80.6	90.0	66.7	90.0	66.7	90.0	57.4	61.5	62.0	80.6	80.6	66.7	58.5	51.9	38.9	77.8	53.7
	57 1/2	75.7	90.0	62.6	90.0	62.6	90.0	53.9	57.7	58.3	75.7	75.7	62.6	55.0	48.7	36.5	73.0	50.4
	69	63.0	76.1	52.2	76.1	52.2	76.8	44.9	48.1	48.6	63.0	63.0	52.2	45.8	40.6	30.4	60.9	42.0
	72	60.4	72.9	50.0	72.9	50.0	73.6	43.1	46.1	46.5	60.4	60.4	50.0	43.9	38.9	29.2	58.3	40.3
	78	52.5	63.3	43.4	63.3	43.4	64.0	37.4	40.1	40.4	52.5	52.5	43.4	38.1	33.8	25.3	50.7	35.0
	84	48.7	58.8	40.3	58.8	40.3	59.4	34.7	37.2	37.5	48.7	48.7	40.3	35.4	31.4	23.5	47.1	32.5
204	42	71.0	71.0	71.0	71.0	71.0	71.0	69.5	71.0	71.0	71.0	71.0	71.0	70.8	62.7	47.1	71.0	65.0
	48	71.0	71.0	70.6	71.0	70.6	71.0	60.8	65.1	65.7	71.0	71.0	70.6	62.0	54.9	41.2	71.0	56.9
	51 1/2	71.0	71.0	65.8	71.0	65.8	71.0	56.7	60.7	61.2	71.0	71.0	65.8	57.7	51.2	38.4	71.0	53.0
	54	71.0	71.0	62.7	71.0	62.7	71.0	54.0	57.9	58.4	71.0	71.0	62.7	55.1	48.8	36.6	71.0	50.5
	60	68.2	71.0	56.5	71.0	56.5	71.0	48.6	52.1	52.5	68.2	68.2	56.5	49.6	43.9	32.9	65.9	45.5
	65	63.0	71.0	52.1	71.0	52.1	71.0	44.9	48.1	48.5	63.0	63.0	52.1	45.8	40.5	30.4	60.8	42.0
	72	53.7	64.8	44.4	64.8	44.4	65.4	38.3	41.0	41.4	53.7	53.7	44.4	39.0	34.6	25.9	51.9	35.8
	79	48.9	59.1	40.5	59.1	40.5	59.6	34.9	37.4	37.7	48.9	48.9	40.5	35.6	31.5	23.6	47.3	32.6
216	36	71.0	71.0	71.0	71.0	71.0	71.0	71.0	71.0	71.0	71.0	71.0	71.0	71.0	69.1	51.9	71.0	71.0
	42	71.0	71.0	71.0	71.0	71.0	71.0	65.6	70.3	70.9	71.0	71.0	71.0	66.9	59.3	44.4	71.0	61.4
	48	71.0	71.0	66.7	71.0	66.7	71.0	57.4	61.5	62.0	71.0	71.0	66.7	58.5	51.9	38.9	71.0	53.7
	51	75.8	71.0	62.7	71.0	62.7	71.0	54.0	57.9	58.4	71.0	71.0	62.7	55.1	48.8	36.6	71.0	50.5
	61	63.4	71.0	52.5	71.0	52.5	71.0	45.2	48.4	48.8	63.4	63.4	52.5	46.0	40.8	30.6	61.2	42.3
	68	53.2	64.2	44.0	64.2	44.0	64.8	37.9	40.6	40.9	53.2	53.2	44.0	38.6	34.2	25.7	51.3	35.4
	74	48.9	59.0	40.4	59.0	40.4	59.5	34.8	37.3	37.6	48.9	48.9	40.4	35.5	31.4	23.6	47.2	32.6
231	36	71.0	71.0	71.0	71.0	71.0	71.0	71.0	71.0	71.0	71.0	71.0	71.0	71.0	64.6	48.5	71.0	67.0
	42	71.0	71.0	71.0	71.0	71.0	71.0	61.3	65.7	66.3	71.0	71.0	71.0	62.5	55.4	41.6	71.0	57.4
	45 1/2	71.0	71.0	65.8	71.0	65.8	71.0	56.6	60.6	61.2	71.0	71.0	65.8	57.7	51.1	38.4	71.0	53.0
	48	71.0	71.0	62.3	71.0	62.3	71.0	53.7	57.5	58.0	71.0	71.0	62.3	54.7	48.5	36.4	71.0	50.2
	57 3/4	62.6	66.5	51.8	66.5	51.8	66.5	44.6	47.8	48.2	62.6	62.6	51.8	45.5	40.3	30.2	60.4	41.7
	66	54.8	58.2	45.3	58.2	45.3	58.2	39.0	41.8	42.2	54.8	54.8	45.3	39.8	35.3	26.4	52.9	36.5
	70	51.7	54.9	42.7	54.9	42.7	54.9	36.8	39.4	39.8	51.7	51.7	42.7	37.5	33.2	24.9	49.9	34.4

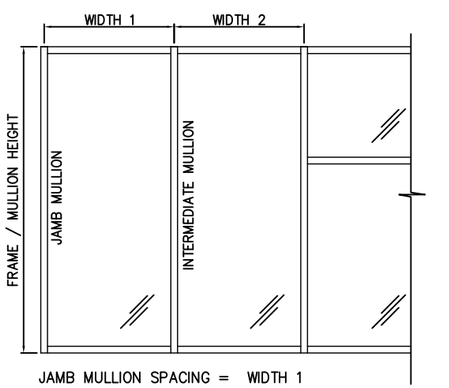

JAMB MULLION SPACING = WIDTH 1

INTERMEDIATE MULLION SPACING = $\frac{\text{WIDTH 1 + WIDTH 2}}{2}$

ANCHOR CONFIGURATIONS A4,B,C4,C6 & F ARE APPROVED FOR ALL MULLION SIZES AND PRESSURES SHOWN IN THE MULLION CHARTS ON SHEETS 14–21.

ANCHOR NOTE:

1. THE ALLOWABLE ANCHOR DESIGN PRESSURES LISTED ARE FOR MULTI–SPAN MULLIONS WITH EQUAL SPANS. ALLOWABLE DESIGN PRESSURES FOR UNEQUAL SPANS WILL REQUIRE PROJECT SPECIFIC CALCULATIONS BY A FLORIDA LICENSED ENGINEER.

REV.#	REVISION	DATE
–	–	12/16/24
–	2023 CODE UPDATE	10/15/23
–	1ST SUBMITTAL	10/12/20
–	PRINTS ISSUED FOR	

KAWNEER
AN ARCONIC COMPANY
555 GUTHRIDGE COURT
NORCROSS, GA 30092
PH: (770) 449–5555
WWW.KAWNEER.COM

SEAL:

SCOTT WOLTERS LICENSE No 62354 STATE OF FLORIDA PROFESSIONAL ENGINEER
AUG 9, 2026

SCOTT WOLTERS
FL PE# 62354

WOLTERS ENGINEERING
(COA# 27194)
15211 97TH ROAD N
WEST PALM BEACH, FL 33412
(561) 225–1982

PRODUCT: 1600 WALL SYSTEM 1 & 2

DWG: 1600–IR–HVHZ

SECTION: 6

SHEET: 32/42

MID-SPAN ANCHOR DETAILS

SEE CHART ON SHEET 37 FOR
FASTENER & SUBSTRATE INFORMATION

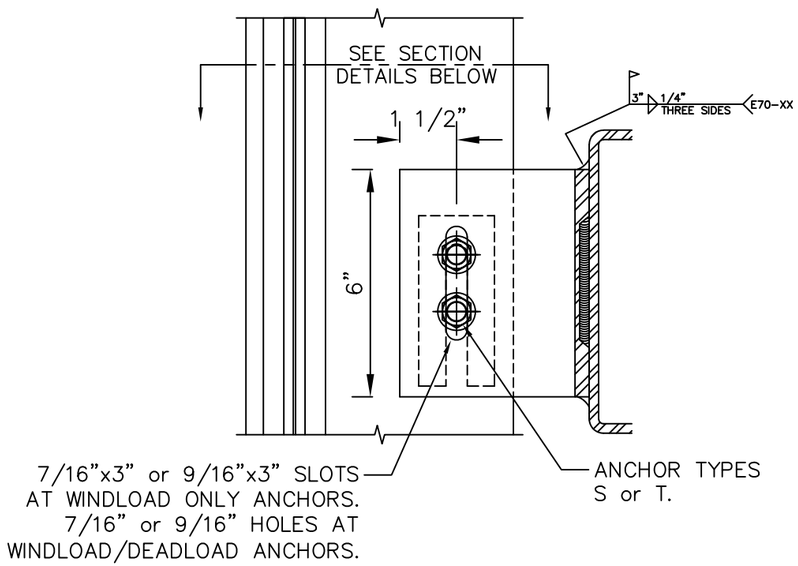

WELD PATTERNS SHOWN ARE APPROVED FOR ALL MULLION SIZES
AND PRESSURES SHOWN IN THE MULLION CHARTS ON SHEETS 16–21.

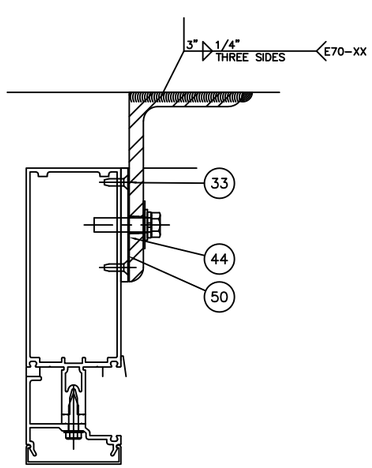

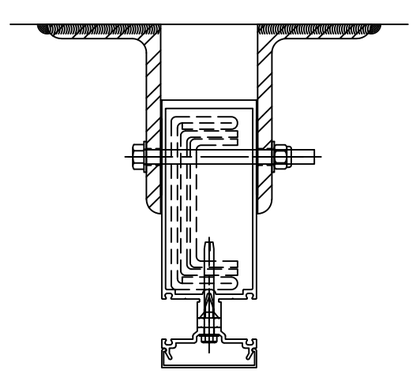

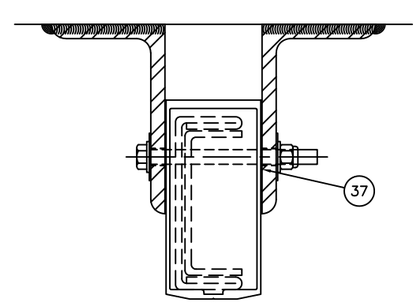

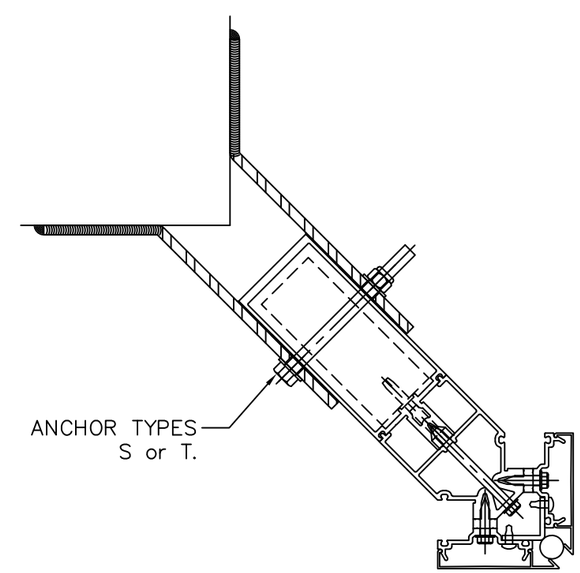

REV.#	DATE	REVISION
–	12/16/24	REVISION
–	10/15/23	2023 CODE UPDATE
–	10/12/20	1ST SUBMITTAL
–	–	PRINTS ISSUED FOR

KAWNEER
AN ARCONIC COMPANY
555 GUTHRIDGE COURT
NORCROSS, GA 30092
PH: (770) 449-5555
WWW.KAWNEER.COM

SEAL:

SCOTT WOLTERS
LICENSE
No 62354
STATE OF FLORIDA
PROFESSIONAL ENGINEER
AUG 17, 2026

SCOTT WOLTERS
FL PE# 62354

WOLTERS ENGINEERING
(COA# 27194)
15211 97TH ROAD N
WEST PALM BEACH, FL 33412
(561) 225-1982

PRODUCT:
1600 WALL SYSTEM 1 & 2

DWG:
1600-IR-HVHZ

SECTION:
6

SHEET:
33/42

MID-SPAN ANCHOR DETAILS

SEE CHART ON SHEET 37 FOR
FASTENER & SUBSTRATE INFORMATION

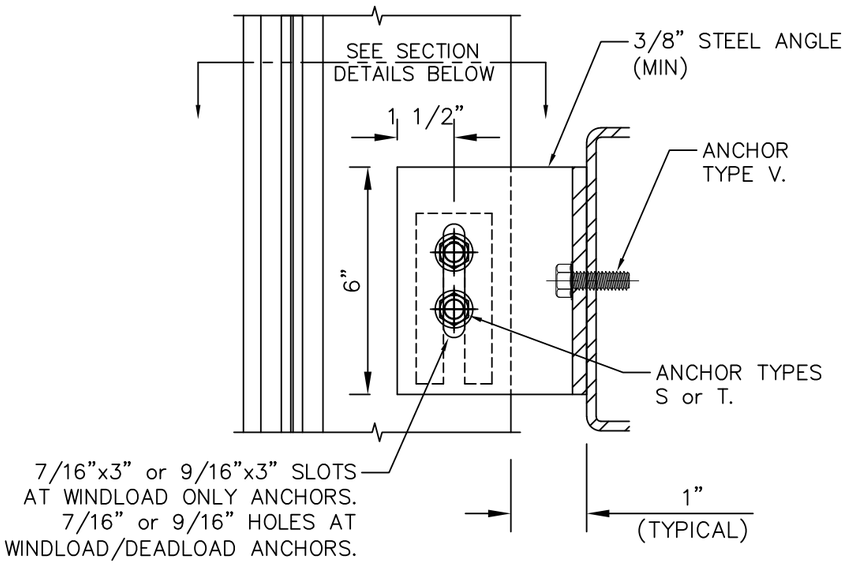

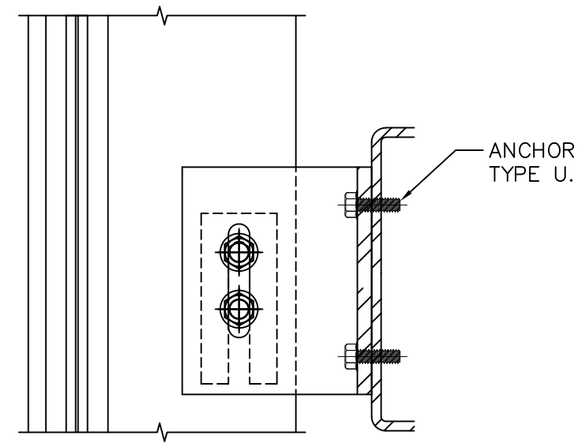

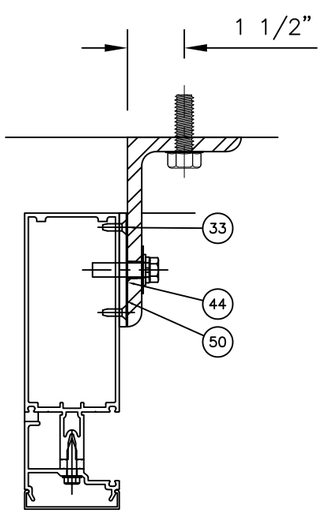

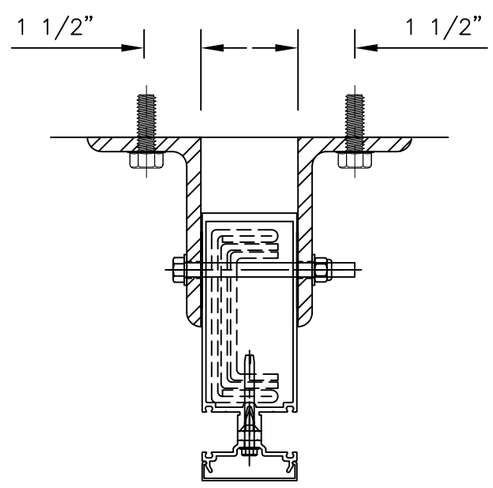

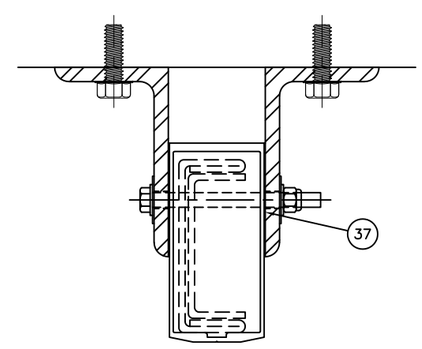

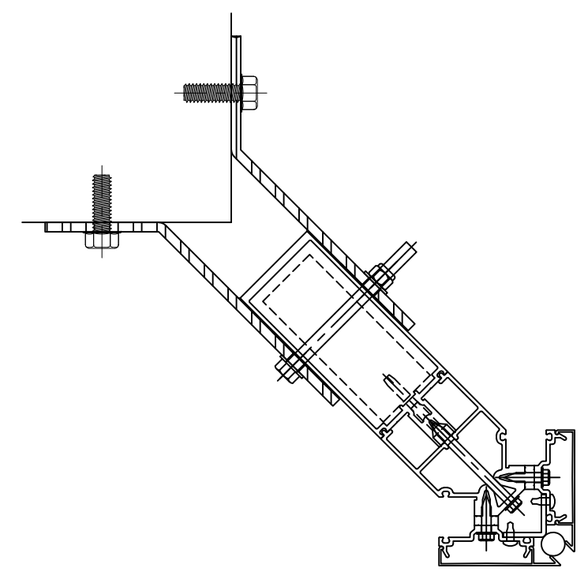

REV.#	DATE	REVISION
–	12/16/24	–
–	10/15/23	2023 CODE UPDATE
–	10/12/20	1ST SUBMITTAL
–	–	PRINTS ISSUED FOR

KAWNEER
AN ARCONIC COMPANY
555 GUTHRIDGE COURT
NORCROSS, GA 30092
PH: (770) 449-5555
WWW.KAWNEER.COM

SEAL:

SCOTT WOLTERS
FL PE# 62354

WOLTERS ENGINEERING
(COA# 27194)
15211 97TH ROAD N
WEST PALM BEACH, FL 33412
(561) 225-1982

PRODUCT: 1600 WALL SYSTEM 1 & 2

DWG: 1600-IR-HVHZ

SECTION: 6

SHEET: 34/42

MID-SPAN ANCHOR DETAILS

SEE CHART ON SHEET 37 FOR
FASTENER & SUBSTRATE INFORMATION

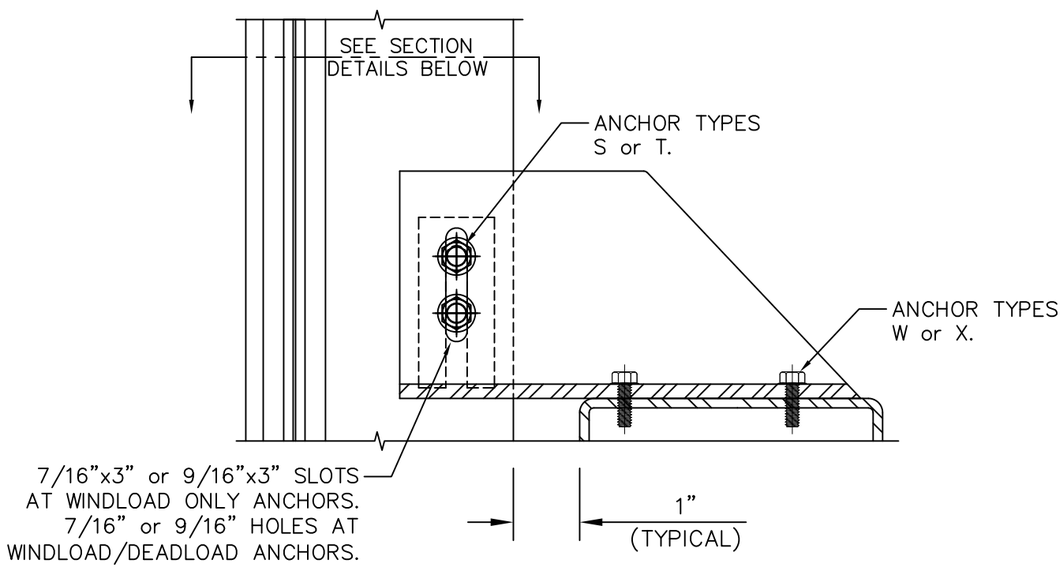

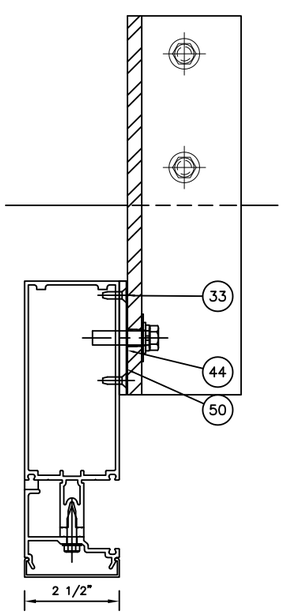

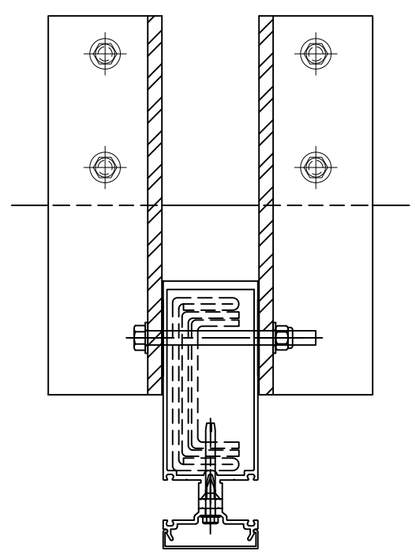

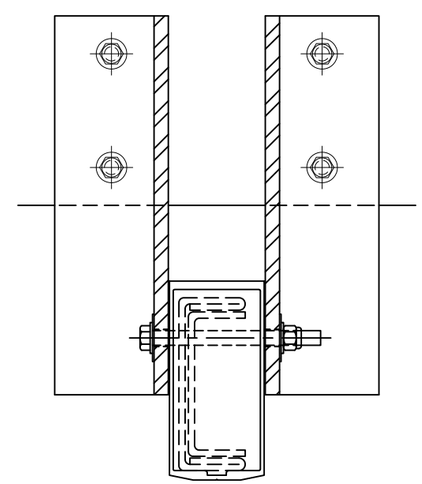

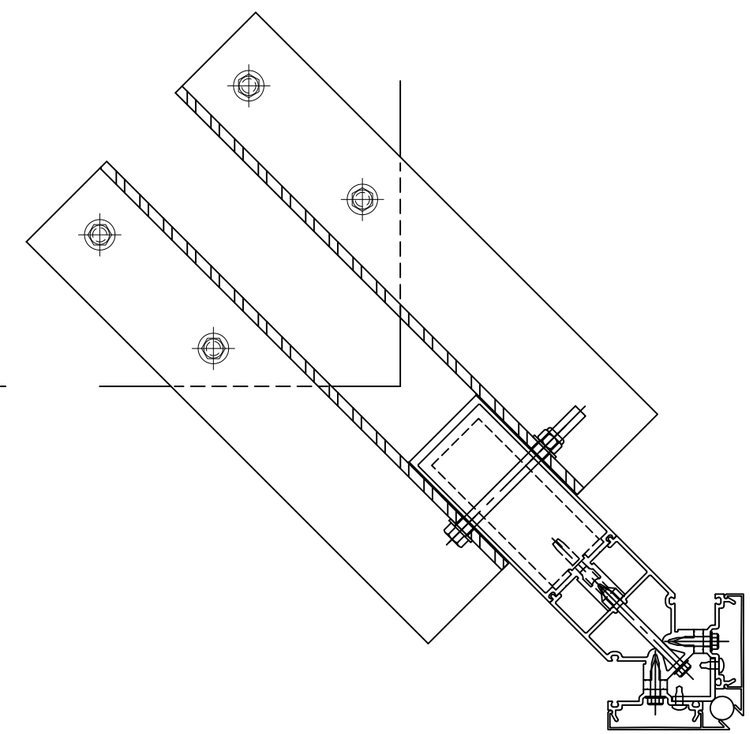

REV.#	DATE	REVISION
–	12/16/24	–
–	10/15/23	2023 CODE UPDATE
–	10/12/20	1ST SUBMITTAL
–	–	PRINTS ISSUED FOR

KAWNEER
AN ARCONIC COMPANY

555 GUTHRIDGE COURT
NORCROSS, GA 30092
PH: (770) 449-5555
WWW.KAWNEER.COM

SEAL:
SCOTT WOLTERS LICENSE No 62354 STATE OF FLORIDA PROFESSIONAL ENGINEER
AUG 17, 2026

SCOTT WOLTERS
FL PE# 62354

WOLTERS ENGINEERING
(COA# 27194)
15211 97TH ROAD N
WEST PALM BEACH, FL 33412
(561) 225-1982

PRODUCT:
1600 WALL SYSTEM 1 & 2

DWG:
1600-IR-HVHZ

SECTION:
6

SHEET:
35/42

MID-SPAN ANCHOR DETAILS

SEE CHART ON SHEET 37 FOR
FASTENER & SUBSTRATE INFORMATION

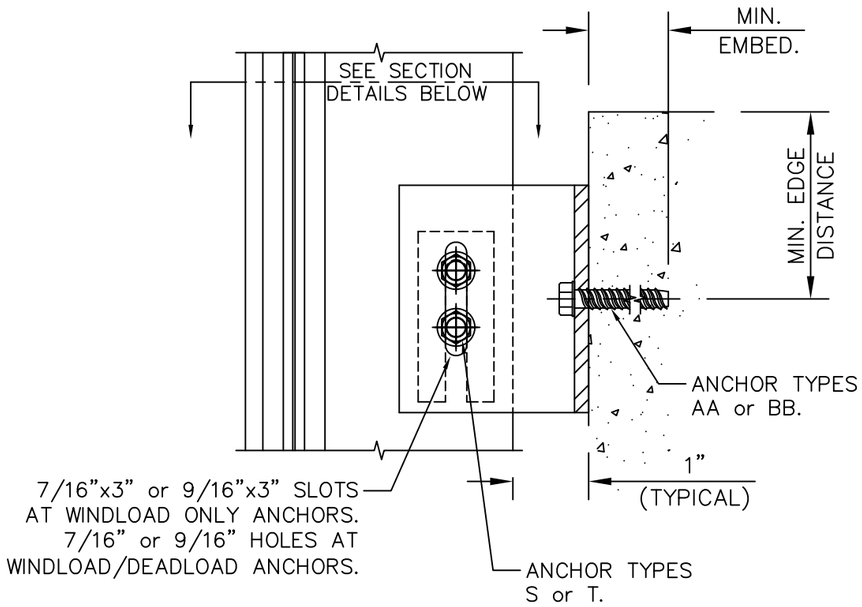

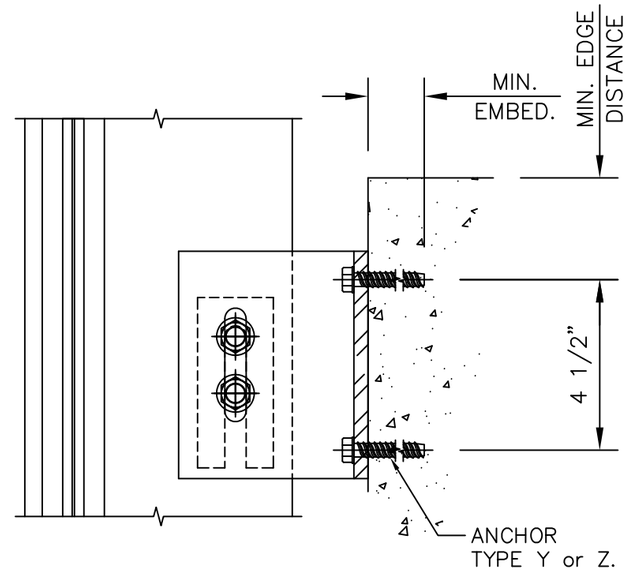

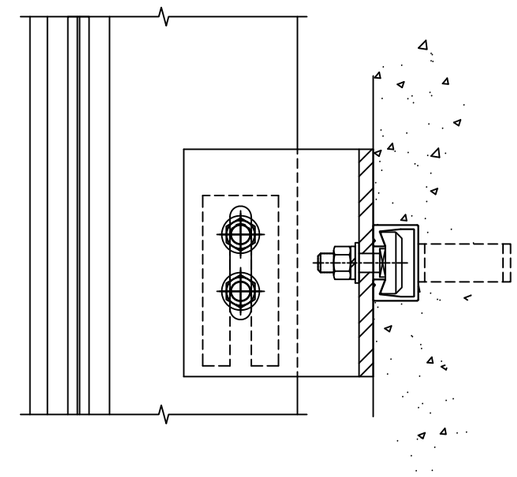

CONCRETE EMBEDS PER PROJECT
SPECIFIC CALCULATIONS FROM A
FLORIDA LICENSED ENGINEER

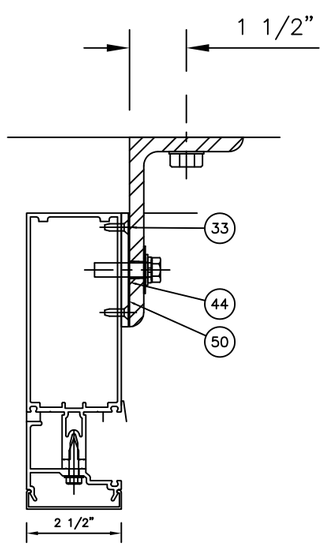

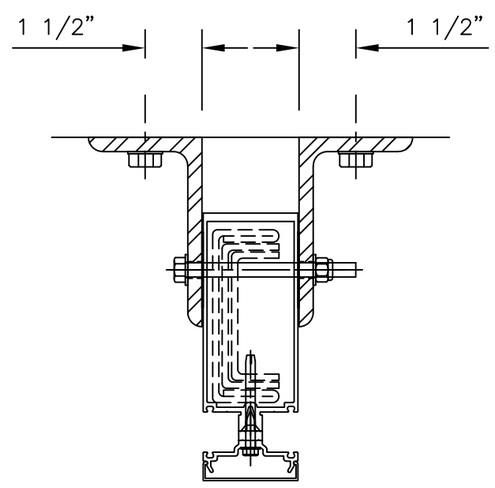

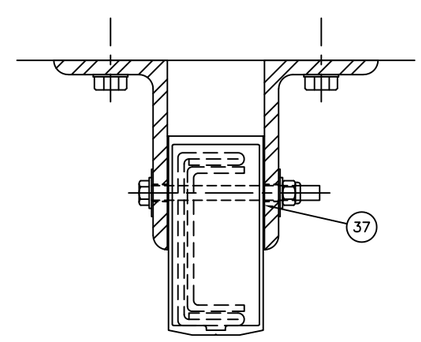

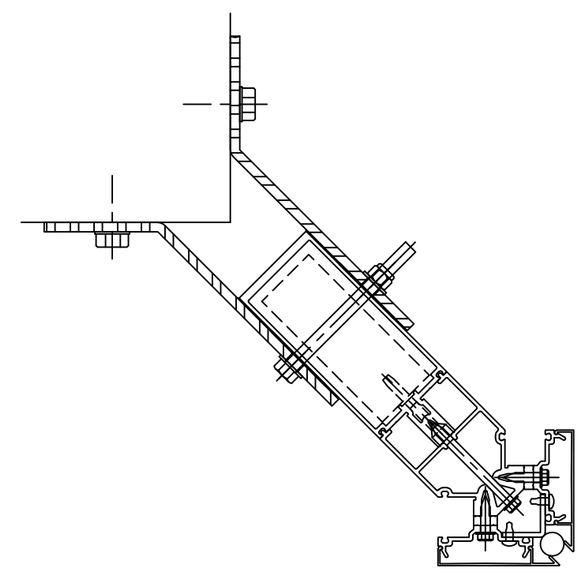

REV.#	DATE	REVISION
–	12/16/24	–
–	10/15/23	2023 CODE UPDATE
–	10/12/20	1ST SUBMITTAL
–	–	PRINTS ISSUED FOR

KAWNEER
AN ARCONIC COMPANY
555 GUTHRIDGE COURT
NORCROSS, GA 30092
PH: (770) 449-5555
WWW.KAWNEER.COM

SEAL:

SCOTT WOLTERS
LICENSE
No 62354
STATE OF FLORIDA
PROFESSIONAL ENGINEER
AUG 9, 2024

SCOTT WOLTERS
FL PE# 62354

WOLTERS ENGINEERING
(COA# 27194)
15211 97TH ROAD N
WEST PALM BEACH, FL 33412
(561) 225-1982

PRODUCT: 1600 WALL SYSTEM 1 & 2

DWG: 1600-IR-HVHZ

SECTION: 6

SHEET: 36/42

MID-SPAN ANCHOR CHARTS

MID-SPAN ANCHORS

SUBSTRATE	MARK	TYPE	QUANTITY MULLION	QUANTITY JAMB	MIN EMBED (in)	MIN EDGE DISTANCE (in)	MAX WL REACTION (lb)
THRU MULLION AND ANCHORS	S	3/8" DIA. BOLT, LOCKNUT, AND WASHERS (Fu=120 ksi min)[4]	2	2	N/A	N/A	6705 lb.
	T	1/2" DIA. BOLT, LOCKNUT, AND WASHERS (Fu=120 ksi min)[4]	2	2	N/A	N/A	9119 lb.
STRUCTURAL STEEL (1/4", A36 min)	U	3/8" DIA. F-TYPE SCREW or BOLT (Fu=120 ksi min)	4	2	FULL*	3/4"	9119 lb.
	V	1/2" DIA. F-TYPE SCREW or BOLT (Fu=120 ksi min)	2	1	FULL*	1"	9119 lb.
	W	3/8" DIA. F-TYPE SCREW or BOLT (Fu=120 ksi min)	4	2	FULL*	3/4"	7748 lb.
	X	1/2" DIA. F-TYPE SCREW or BOLT (Fu=120 ksi min)	4	2	FULL*	1"	9119 lb.
CONCRETE (4000 psi min)	Y	3/8" DIA. WEDGE-TYPE CONCRETE ANCHOR[1]	4	2	3 1/4"	3"	5792 lb.
	Z	3/8" DIA. WEDGE-TYPE CONCRETE ANCHOR[1]	4	2	4 1/2"	3"	7212 lb.
	AA	1/2" DIA. WEDGE-TYPE CONCRETE ANCHOR[1]	2	1	4 1/4"	4"	5142 lb.
	BB	1/2" DIA. STUD -TYPE CONCRETE ANCHOR[2]	2	1	4 1/2"	6"	4882 lb.

ANCHOR NOTES:

1. WEDGE-TYPE ANCHORS INCLUDE DeWALT SCREW-BOLT+, HILTI KWIK HUZ-EZ, AND SIMPSON STRONG-TIE TITAN HD.
2. STUD-TYPE ANCHORS INCLUDE HILTI KWIK BOLT 3 AND SIMPSON STRONG-TIE WEDGE-ALL.
3. THRU BOLTS MAY BE CARBON STEEL (GRADE 5 MIN) OR STAINLESS STEEL(Fu=120 ksi min)

* FOR FASTENERS IN STEEL, FASTENER THREADS MUST FULLY PENETRATE THE WALL THICKNESS OF THE STEEL, WITH THREE ADDITIONAL THREADS BEYOND.

ANCHOR CONFIGURATIONS T, U, V, and X ARE APPROVED FOR ALL MULLION SIZES AND PRESSURES SHOWN IN THE MULLION CHARTS ON SHEETS 16–21.

MID-SPAN ANCHORS - ALLOWABLE DESIGN PRESSURES

MULLION HEIGHT (in)	MULLION WIDTH (in)	DESIGN PRESSURES FOR MULTI-SPAN MULLIONS WITH EQUAL SPANS (pdf)										
		(2) 3/8" BOLTS THRU MULLION	WINDLOAD ONLY ANCHORS					WINDLOAD/DEADLOAD ANCHORS				
			W	Y	Z	AA	BB	W	Y	Z	AA	BB
144	48	90.0	90.0	90.0	90.0	85.7	81.4	90.0	77.8	90.0	65.9	61.8
	60	89.3	90.0	77.2	90.0	68.6	65.1	90.0	57.9	71.6	47.8	44.7
	72	74.4	86.1	64.4	80.1	57.1	54.2	85.8	44.3	55.7	35.5	32.9
	78	68.7	79.5	59.4	74.0	52.7	50.1	79.2	39.0	49.5	30.6	28.3
	84	63.8	73.8	55.2	68.7	49.0	46.5	73.6	34.5	44.1	26.3	24.2
	90	59.6	68.9	51.5	64.1	45.7	43.4	68.7	30.4	39.4	22.5	20.6
	96	55.8	64.6	48.3	60.1	42.9	40.7	64.4	26.9	35.3	19.1	17.4
156	48	90.0	90.0	89.1	90.0	79.1	75.1	90.0	71.9	90.0	60.8	57.1
	60	82.5	90.0	71.3	90.0	63.3	60.1	90.0	53.4	66.1	44.2	41.2
	72	68.7	79.5	59.4	74.0	52.7	50.1	79.2	40.9	51.4	32.7	30.4
	84	58.9	68.1	50.9	63.4	45.2	42.9	67.9	31.8	40.7	24.3	22.4
	96	51.5	59.6	44.6	55.5	39.6	37.6	59.4	24.8	32.6	17.6	16.0
168	48	90.0	90.0	82.7	90.0	73.5	69.7	90.0	66.7	81.5	56.5	53.0
	60	76.6	88.5	66.2	82.4	58.8	55.8	88.3	49.6	61.4	41.0	38.3
	66	69.6	80.5	60.2	74.9	53.4	50.7	80.3	43.3	54.0	35.3	32.8
	72	63.8	73.8	55.2	68.7	49.0	46.5	73.6	38.0	47.7	30.4	28.2
	84	54.7	63.2	47.3	58.9	42.0	39.9	63.1	29.5	37.8	22.5	20.8
	90	51.0	59.0	44.1	54.9	39.2	37.2	58.9	26.1	33.8	19.3	17.7
	96	47.9	55.3	41.4	51.5	36.7	34.9	55.2	23.0	30.2	16.3	14.9
180	48	89.3	90.0	77.2	90.0	68.6	65.1	90.0	62.3	76.1	52.7	49.4
	60	71.5	82.6	61.8	76.9	54.8	52.1	82.4	46.3	57.3	38.3	35.7
	66	65.0	75.1	56.2	69.9	49.9	47.3	74.9	40.4	50.4	32.9	30.6
	72	59.6	68.9	51.5	64.1	45.7	43.4	68.7	35.5	44.6	28.4	26.3
	78	55.0	63.6	47.5	59.2	42.2	40.1	63.4	31.2	39.6	24.5	22.6
	84	51.0	59.0	44.1	54.9	39.2	37.2	58.9	27.6	35.3	21.0	19.4
	89	48.2	55.7	41.7	51.9	37.0	35.1	55.6	24.9	32.1	18.5	16.9
187	48	86.0	90.0	74.3	90.0	66.0	62.7	90.0	59.9	73.2	50.7	47.6
	54	76.4	88.4	66.1	82.3	58.7	55.7	88.1	51.4	63.2	43.1	40.3
	60	68.8	79.6	59.5	74.0	52.8	50.1	79.3	44.6	55.1	36.8	34.4
	66	62.5	72.3	54.1	67.3	48.0	45.6	72.1	38.9	48.5	31.7	29.5
	72	57.3	66.3	49.6	61.7	44.0	41.8	66.1	34.1	42.9	27.3	25.4
	78	52.9	61.2	45.7	57.0	40.6	38.6	61.0	30.1	38.1	23.5	21.8
	86	48.0	55.5	41.5	51.7	36.8	35.0	55.3	25.5	32.7	19.2	17.7
192	48	83.8	90.0	72.4	90.0	64.3	61.0	90.0	58.4	71.3	49.4	46.4
	54	74.4	86.1	64.4	80.1	57.1	54.2	85.8	50.1	61.5	41.9	39.3
	60	67.0	77.5	57.9	72.1	51.4	48.8	77.3	43.4	53.7	35.9	33.5
	66	60.9	70.4	52.7	65.6	46.7	44.4	70.2	37.9	47.2	30.9	28.7
	72	55.8	64.6	48.3	60.1	42.9	40.7	64.4	33.2	41.8	26.6	24.7
	78	51.5	59.6	44.6	55.5	39.6	37.6	59.4	29.3	37.1	22.9	21.2
	84	47.9	55.3	41.4	51.5	36.7	34.9	55.2	25.8	33.1	19.7	18.2
204	42	71.0	71.0	71.0	71.0	69.1	65.6	71.0	64.9	71.0	55.5	52.1
	48	71.0	71.0	68.1	71.0	60.5	57.4	71.0	54.9	71.0	46.5	43.6
	54	70.1	71.0	60.6	71.0	53.8	51.1	71.0	47.1	57.9	39.5	36.9
	60	63.1	71.0	54.5	67.9	48.4	45.9	71.0	40.8	50.5	33.8	31.5
	66	57.3	66.3	49.6	61.7	44.0	41.8	66.1	35.7	44.4	29.0	27.0
	72	52.5	60.8	45.4	56.6	40.3	38.3	60.6	31.3	39.3	25.0	23.2
	79	47.9	55.4	41.4	51.6	36.8	34.9	55.2	27.0	34.3	21.1	19.5
216	42	71.0	71.0	71.0	71.0	65.3	62.0	71.0	61.3	71.0	52.4	49.2
	48	71.0	71.0	64.4	71.0	57.1	54.2	71.0	51.9	63.4	43.9	41.2
	54	66.2	71.0	57.2	71.0	50.8	48.2	71.0	44.5	54.7	37.3	34.9
	60	59.6	68.9	51.5	64.1	45.7	43.4	68.7	38.6	47.7	31.9	29.8
	66	54.1	62.6	46.8	58.3	41.6	39.5	62.4	33.7	42.0	27.4	25.5
	74	48.3	55.8	41.7	52.0	37.1	35.2	55.7	28.3	35.7	22.5	20.9
231	36	71.0	71.0	71.0	71.0	71.0	67.6	71.0	69.0	71.0	59.5	56.0
	42	71.0	71.0	71.0	71.0	61.1	58.0	71.0	57.3	71.0	49.0	46.0
	48	71.0	71.0	60.2	71.0	53.4	50.7	71.0	48.5	59.3	41.1	38.5
	54	61.9	71.0	53.5	71.0	47.5	45.1	71.0	41.6	51.2	34.9	32.6
	60	55.7	66.5	48.1	59.9	42.7	40.6	66.5	36.1	44.6	29.8	27.8
	66	50.6	58.2	43.8	54.5	38.9	36.9	58.2	31.5	39.2	25.6	23.9
	70	47.7	54.9	41.3	51.4	36.6	34.8	54.9	28.8	36.1	23.2	21.6

WALL SECTION 1 NOTES:

1. THE ALLOWABLE ANCHOR DESIGN PRESSURES LISTED ARE FOR MULTI–SPAN MULLIONS WITH EQUAL SPANS. ALLOWABLE ANCHOR DESIGN PRESSURES FOR UNEQUAL SPANS WILL REQUIRE PROJECT SPECIFIC CALCULATIONS BY A FLORIDA LICENSED ENGINEER.
2. THE ALLOWABLE DESIGN PRESSURES LISTED FOR WINDLOAD/DEADLOAD ANCHORS ARE BASED ON 288" MAX. MULLION LENGTHS AND STANDARD ANCHOR CONFIGURATIONS AS SHOWN. ALLOWABLE DESIGN PRESSURES FOR LONGER MULLION LENGTHS OR FOR ANY DEVIATIONS FROM THE ANCHORS SHOWN WILL REQUIRE PROJECT SPECIFIC CALCULATIONS BY A FLORIDA LICENSED ENGINEER.

REV.#	REVISION	DATE
–	–	12/16/24
–	2023 CODE UPDATE	10/15/23
–	1ST SUBMITTAL	10/12/20
–	PRINTS ISSUED FOR	

KAWNEER
AN ARCONIC COMPANY
555 GUTHRIDGE COURT
NORCROSS, GA 30092
PH: (770) 449–5555
WWW.KAWNEER.COM

SEAL:

SCOTT WOLTERS LICENSE No 62354 STATE OF FLORIDA PROFESSIONAL ENGINEER
AUG 07, 2026

SCOTT WOLTERS
FL PE# 62354

WOLTERS ENGINEERING
(COA# 27194)
15211 97TH ROAD N
WEST PALM BEACH, FL 33412
(561) 225–1982

PRODUCT: 1600 WALL SYSTEM 1 & 2

DWG: 1600–IR–HVHZ

SECTION: 6

FASTENED JAMB DETAILS
F-PERIMETER ANCHOR CHARTS

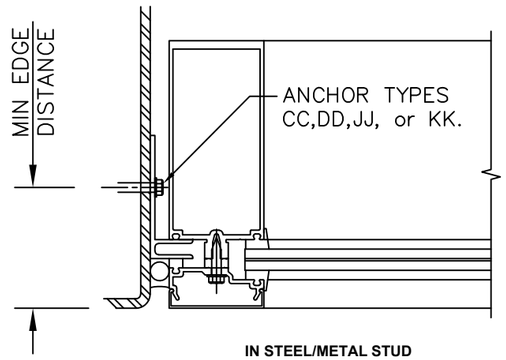

IN STEEL/METAL STUD

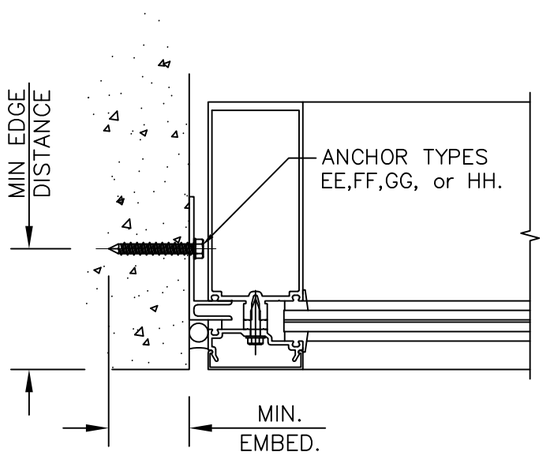

IN CONCRETE/CMU

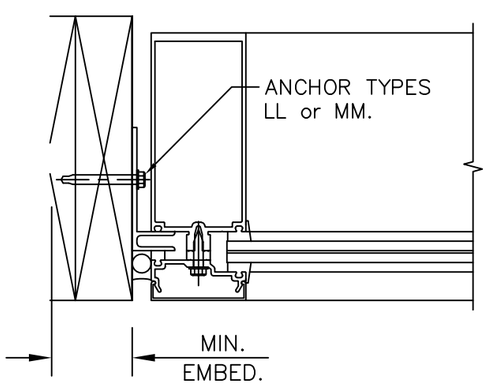

IN WOOD

JAMB F-PERIMETER ANCHORS

SUBSTRATE	MARK	TYPE	MIN EMBED (in)	MIN EDGE DISTANCE (in)	MAX. REACTION (lb)
STRUCTURAL STEEL (1/4", A36 min)	CC	1/4" DIA. F-TYPE SCREW or BOLT (Fu=120 ksi min)[1]	FULL*	3/4"	425 lb.
	DD	1/4" DIA. DEWALT DRIL-FLEX	FULL*	3/4"	581 lb.
CONCRETE (2846 psi min)	EE	1/4" DIA. DEWALT ULTRACON	1 3/4"	2 1/2"	357 lb.
CONCRETE (3515 psi min)	FF	5/16" DIA. DEWALT ULTRACON	1 3/4"	3 1/8"	581 lb.
CMU (ASTM C-90 GRADE N, TYPE 1 min)	GG	1/4" DIA. DEWALT ULTRACON	1 3/4"	2 1/2"	200 lb.
	HH	5/16" DIA. DEWALT ULTRACON	1 3/4"	2 1/2"	296 lb.
METAL STUD (16 Ga, 45 ksi min)	JJ	1/4" DIA. F-TYPE SCREW (Fu=120 ksi min)[1]	FULL*	3/4"	357 lb.
	KK	1/4" DIA. DEWALT DRIL-FLEX	FULL*	3/4"	357 lb.
WOOD (S.G.=0.5 min)	LL	1/4" DIA. DEWALT ULTRACON	1 3/4"	1 5/8"	196 lb.
	MM	5/16" DIA. DEWALT ULTRACON	1 3/4"	1 3/4"	357 lb.

* FOR FASTENERS IN STEEL, FASTENER THREADS MUST FULLY PENETRATE THE WALL THICKNESS OF THE STEEL, THREE ADDITIONAL THREADS BEYOND.

CORROSION RESISTANCE NOTES:

WITHIN 3000 ft OF A SALTWATER COASTLINE:

1. FASTENERS MUST BE EITHER:
   - A. GALVANIZED TO MEET ASTM A153, CLASS C.
   - B. GALVANIZED TO MEET ASTM A641 CLASS 3S.
   - C. COATED TO EXHIBIT <5% RED RUST AFTER 1000 HOURS OF EXPOSURE PER ASTM B117.
   - D. 300 SERIES STAINLESS STEEL (Fu=100 ksi min).

JAMB F-PERIMETER MAX. FASTENER SPACING (in)

WINDLOAD (+/- psf)	JAMB DLO WIDTH (in)	FASTENER CONFIGURATIONS CC	DD	EE	FF	GG	HH	JJ	KK	LL	MM
60	48	18	24	18	18	18	18	18	18	18	32
	60	18	24	18	18	15	18	18	18	14	26
	72	18	24	18	18	12	18	18	18	12	22
	84	18	24	18	18	11	16	18	18	11	19
	96	18	24	17	18	10	14	17	17	9	17
75	48	18	24	18	18	14	18	18	18	14	26
	60	18	24	18	18	12	17	18	18	12	21
	72	18	24	18	18	10	15	18	18	10	18
	84	18	24	15	18	9	13	15	15	8	15
	96	16	22	14	18	8	11	14	14	7	14
90	48	18	24	18	18	12	18	18	18	12	22
	60	18	24	18	18	10	15	18	18	10	18
	72	18	24	15	18	8	12	15	15	8	15
	84	15	21	13	18	7	11	13	13	7	13
	96	13	18	11	18	6	9	11	11	6	11
100	48	18	24	18	18	11	16	18	18	11	19
	60	18	24	16	18	9	13	16	16	9	16
	72	16	22	13	18	7	11	13	13	7	13
	84	14	19	12	18	6	10	12	12	6	12
	96	12	17	10	17	6	8	10	10	6	10
110	48	18	24	18	18	11	16	18	19	11	19
	60	17	23	14	18	8	12	14	14	8	14
	72	14	20	12	18	7	10	12	12	7	12
	84	13	17	11	17	6	9	11	11	6	11
	96	11	15	9	15	-	8	9	9	5	9
120	48	18	24	16	18	9	13	16	16	9	16
	60	16	21	13	18	7	11	13	13	7	13
	72	13	18	11	18	6	9	11	11	6	11
	84	11	16	10	16	-	8	10	10	5	10
	96	10	14	8	14	-	7	8	8	5	8
127	48	18	24	15	18	9	13	15	15	8	15
	60	15	20	12	18	7	10	12	12	7	12
	72	13	17	11	17	6	9	11	11	6	11
	84	11	15	9	15	-	8	9	9	5	9
	96	10	13	8	13	-	7	8	8	4	8

DOORJAMB ANCHORS

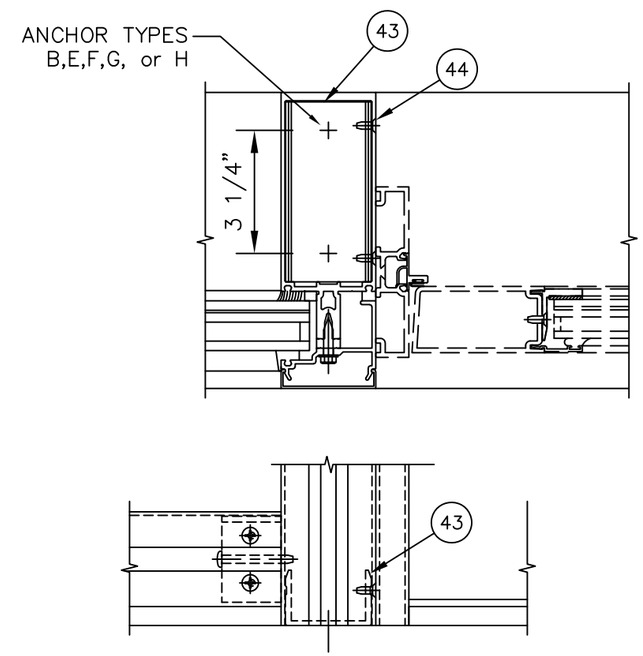

ANCHOR CONFIGURATIONS B & F ARE APPROVED FOR ALL MULLION SIZES AND PRESSURES SHOWN IN THE MULLION CHARTS ON SHEETS 14–20. ANCHOR CONFIGURATIONS E,G, & H ARE APPROVED FOR USE UP TO THE DESIGN PRESSURES LISTED IN THE CHARTS ON SHEETS 31–32.

REV.#	DATE
–	8/17/26
–	12/16/24
–	10/15/23
–	10/12/20

CODE UPDATE
REVISION
2023 CODE UPDATE
1ST SUBMITTAL
PRINTS ISSUED FOR

KAWNEER
AN ARCONIC COMPANY
555 GUTHRIDGE COURT
NORCROSS, GA 30092
PH: (770) 449-5555
WWW.KAWNEER.COM

SCOTT WOLTERS LICENSE No 62354 STATE OF FLORIDA PROFESSIONAL ENGINEER
AUG 17, 2026

SEAL:

SCOTT WOLTERS
FL PE# 62354

WOLTERS ENGINEERING
(COA# 27194)
15211 97TH ROAD N
WEST PALM BEACH, FL 33412
(561) 225-1982

PRODUCT: 1600 WALL SYSTEM 1 & 2
DWG: 1600-IR-HVHZ
SECTION: 6
SHEET: 38/42

BILL OF MATERIALS

BILL OF MATERIALS

NO.	PART NO.	DESCRIPTION	DIMENSIONS	MATERIAL
01	162311	"F" ANCHOR	3.250 x 8.000 x 0.250	6063 T6 ALUMINUM
02	162312	"T" ANCHOR	3.250 x 8.500 x 0.250	6063 T6 ALUMINUM
03	162006	COVER	2.500 x 0.504 x 0.060	6063 T6 ALUMINUM
04	162097	6-3/4" OPEN BACK HORIZONTAL	2.479 x 5.750 x 0.100	6063 T6 ALUMINUM
05	162518	PERIMETER OFFSET PRESSURE PLATE	2.500 x 1.347 x 0.100	6063 T6 ALUMINUM
06	128405	#12 x 7/8" AB FHTF	#12 x 7/8" AB FHTF	300 SERIES STAINLESS STEEL
07	128394	#12 x 1-7/8" TYPE I CRPHTFS B	#12 x 1-7/8" B PHTF	430 SERIES STAINLESS STEEL
08	162332	7-1/2" HEAD / SILL SHEAR BLOCK	4.395 x 2.115 x 0.125	6063 T6 ALUMINUM
09	162020	OPEN BACK FILLER	0.434 x 4.973 x 0.090	6063 T6 ALUMINUM
10	162517	OFFSET PRESSURE PLATE	2.500 x 0.847 x 0.100	6063 T6 ALUMINUM
11	162091	7-1/2" OPEN BACK HORIZONTAL	2.479 x 6.500 x 0.100	6063 T6 ALUMINUM
12	162378	7-1/2" SHEAR BLOCK	4.395 x 2.270 x 0.125	6063 T6 ALUMINUM
13	162093	6-3/4" OPEN BACK HORIZONTAL	2.479 x 5.750 x 0.100	6063 T6 ALUMINUM
14	162003	LIGHT 7-1/2" VERTICAL / HORIZONTAL	2.479 x 6.500 x 0.100	6063 T6 ALUMINUM
15	162016	HEAVY 6-3/4" VERTICAL / HORIZONTAL	2.479 x 5.750 x 0.100	6063 T6 ALUMINUM
16	162377	6" SHEAR BLOCK	2.895 x 2.270 x 0.125	6063 T6 ALUMINUM
17	162001	LIGHT 6" HORIZONTAL	2.500 x 5.000 x 0.100	6063 T6 ALUMINUM
18	162405	SHEAR BLOCK AT 90 DEG CORNERS	1.460 x 2.270 x 0.125	6063 T6 ALUMINUM
19	028843	#12 x 1/2" TYPE I CRFCHT SB	#12 x 1/2" TYPE I CRFCHT SB	300 SERIES STAINLESS STEEL
20	162528	1-5/16" PERIMETER OFFSET PRESSURE PLATE	2.500 x 2.097 x 0.100	6063 T6 ALUMINUM
21	162095	7-1/2" OPEN BACK HORIZONTAL FOR 1" FRAME	2.479 x 6.500 x 0.100	6063 T6 ALUMINUM
22	162516	JAMB OFFSET PRESSURE PLATE	2.500 x 0.847 x 0.100	6063 T6 ALUMINUM
24	162176	F PERIMETER FOR 1/4" FRAME	3.250 x 1.125 x 0.100	6063 T6 ALUMINUM
25	162017	F PERIMETER FOR 1" FRAME	4.000 x 1.125 x 0.100	6063 T6 ALUMINUM
26	162004	HEAVY 7-1/2" VERTICAL / HORIZONTAL FOR 1" FRAME	2.500 x 6.500 x 0.100	6063 T6 ALUMINUM
27	166017	7-1/2" HEAVY SSG VERTICAL	2.500 x 5.250 x 0.100	6063 T6 ALUMINUM
28	162222	90 DEG CORNER ADAPTER	2.500 x 3.745 x 0.100	6063 T6 ALUMINUM
29	809331	CUSTOM 90 DEG CORNER ADAPTER	2.500 x 4.344 x 0.100	6063 T5 ALUMINUM (#10 FINISH)
30	176012	90 DEG OUTSIDE CORNER COVER	2.482 x 0.504 x 0.060	6063 T6 ALUMINUM
31	162255	7-1/2" 90 DEG OUTSIDE CORNER COVER	2.500 x 2.458 x 0.080	6063 T6 ALUMINUM
32	162254	7-1/2" 90 DEG OUTSIDE CORNER SSG MULLION	2.500 x 6.473 x 0.125	6063 T6 ALUMINUM
33	128348	10-16 x 1-1/4" FHSMD	10-16 x 1-1/4" FHSMD	400 SERIES STAINLESS STEEL
34	162307	7-1/2" SLEEVE	2.260 x 4.750 x 0.125	6063 T6 ALUMINUM
35	128267	12 x 1" TYPE I CRPHTFS AB	12 x 1" TYPE I CRPHTFS AB	300 SERIES STAINLESS STEEL
36	162313	SLEEVE FOR EXTERIOR COVER 3/4"	2.219 x 0.187 x 0.031	.031 5005 H32 SHEET ALUMINUM FINISH
37	162306	6" SLEEVE	2.260 x 3.250 x 0.125	6063 T6 ALUMINUM
38	162301	MATING STEEL REINFORCING 1	1.750 x 4.560 x 0.164	GRADE 50 STEEL
39	904208	1/4 x 2" FCHTCS D/F	1/4 x 2" FCHTCS D/F	300 SERIES STAINLESS STEEL
40	162302	MATING STEEL REINFORCING 2	1.500 x 3.810 x 0.164	GRADE 50 STEEL
41	162303	MATING STEEL REINFORCING 3	1.250 x 3.388 x 0.164	GRADE 50 STEEL
42	N/A	1" x 3" STEEL (BY OTHERS)	1.000 x 3.000	GRADE 50 STEEL
43	162320	7-1/2" SHEAR BLOCK AT DOOR	1.460 x 2.270 x 0.125	6063 T6 ALUMINUM
44	128910	10 x 1/2" TYPE I CRFCHTFS B	10 x 1/2" TYPE I CRFCHTFS B	300 SERIES STAINLESS STEEL
45	977110	10 x 5/8" TYPE I CRFCHTFS B	10 x 5/8" TYPE I CRFCHTFS B	300 SERIES STAINLESS STEEL
46	028596	3/8" FLAT WASHER TYPE A - NARROW	DIA 0.750 x 0.040	300 SERIES STAINLESS STEEL
47	028779	3/8" HELICAL SPRING LOCK WASHER	DIA 0.869 x 0.125	300 SERIES STAINLESS STEEL
48	028778	3/8"-16 x 1-1/2" HCS B	3/8"-16 x 1-1/2" HCS B	400 SERIES STAINLESS STEEL
49	027477	ALUMINUM TO STEEL SEPARATOR	2.000 x 4.500 x 0.031	THERMO-TORK TN-9004 NON-ASBESTOS GASKET
50	162507	ANCHOR PLATE AT JAMBS	3.000 x 0.188	6063 T6 ALUMINUM
51	216301	1/2" SLIP PLAIN WASHER	DIA 1.250 x 0.063	#101 NYLON NATURAL COLOR BY JET FASTENER
52	128392	3/8"-16 HEX LOCKNUT	0.563 x 0.650	300 SERIES STAINLESS STEEL
53	128918	3/8-16 x 4-1/2" PRHHMS	3/8-16 x 4-1/2" PRHHMS	300 SERIES STAINLESS STEEL
54	N/A	1 1/4" x 4 1/2" BAR STEEL	1 1/4" x 4 1/2" BAR STEEL	GRADE 50 STEEL
55	N/A	1 3/4" x 4-1/2" BAR STEEL	1 3/4" x 4-1/2" BAR STEEL	GRADE 50 STEEL
56	162519	HIGH PRESSURE SHEAR BLOCK	2.217" x 4.718" x 1.5"	6063-T6 ALUMINUM
57	128284	#12 x 1 1/2" AB FHTF SCREW	#12 x 1 1/2" AB FHTF	400 SERIES STAINLESS STEEL
58	162014	LIGHT 5 1/4" HORIZONTAL	2.500 x 4.25 x 0.100	6063 T6 ALUMINUM
59	162218	9/16" FEMALE SPLICE HORIZONTAL	1.125 x 6.848 x .125	6063-T6 ALUMINUM
60	162219	9/16" MALE SPLICE HORIZONTAL	2.328 x 6.912 x .125	6063-T6 ALUMINUM
61	162249	1 5/16" FEMALE SPLICE HORIZONTAL	1.125 x 7.598 x .125	6063 T6 ALUMINUM
62	162250	1 5/16" MALE SPLICE HORIZONTAL	2.328 x 7.662 x 0.125	6063 T6 ALUMINUM
63	162521	SHEAR BLOCK - EXPANSION HORIZONTAL	1.50 x .750 x .125 x 4.25	6063 T6 ALUMINUM
64	162250	CORNER SHEAR BLOCK - EXP. HORIZONTAL	1.50 x .750 x .125 x 4.25	6063 T6 ALUMINUM

GLAZING MATERIALS

NO.	PART NO.	DESCRIPTION	DIMENSIONS	MATERIAL
81	162310	THERMAL SEPARATOR	0.626 x 0.600	SHORE "A" 60±5 DUROMETER EPDM
82	027845	TAPE	0.313 x 0.250	BLACK POLYURETHANE FOAM
83	128406	1/4 x 1" HWHTFS AB	1/4 x 1" HWHTFS AB	300 SERIES STAINLESS STEEL
84	N/A	STRUCTURAL SILICONE SEALANT (BY OTHERS)	N/A	SILICONE
85	027850	FIXED GASKET	0.615 x 0.630	SHORE "A" 60±5 DUROMETER EPDM
86	027342	SETTING BLOCK	0.563 x 0.188	SHORE "A" 80±5 DUROMETER EPDM
87	027081	SETTING BLOCK	1.875 x 4.125 x 0.250	SHORE "A" 85±5 DUROMETER EPDM
88	127254	3M VHB 3/4" SG TAPE B23	0.750 x 0.090	CONFORMABLE ACRYLIC FOAM
89	128475	8 x 1" TYPE I CRPHTFS A	8 x 1" TYPE I CRPHTFS A	300 SERIES STAINLESS STEEL
90	611002	SUPPORT/STIFFENER ACM PANEL	0.750 x 1.093 x 0.090	6063 T6 ALUMINUM
91	N/A	DOW CORNING	N/A	995 SILICONE SEALANT (BY OTHERS)
92	127143	TAPE	1.000 x 0.250	BLACK POLYURETHANE FOAM
93	127150	SETTING BLOCK	1.688 x 0.437	SHORE "A" DUROMETER EPDM
94	027367	SETTING BLOCK	0.750 x 0.438	SHORE "A" 85±5 DUROMETER EPDM
95	127196	SS EXTERIOR GASKET	0.928 x 0.615	SHORE "A" 60±5 DUROMETER EPDM
96	128401	10 x 1" TYPE I CRFCHTFS	10 x 1" TYPE I CRFCHTFS	300 SERIES STAINLESS STEEL
97	027857	FIXED GASKET	0.310 x 0.360	SHORE "A" 70±5 DUROMETER EPDM

REV.#	DATE	REVISION
–	12/16/24	REVISION
–	2/19/24	REVISION
–	10/15/23	2023 CODE UPDATE
–	10/12/20	1ST SUBMITTAL
		PRINTS ISSUED FOR

KAWNEER
AN ARCONIC COMPANY
555 GUTHRIDGE COURT
NORCROSS, GA 30092
PH: (770) 449-5555
WWW.KAWNEER.COM

SEAL:

SCOTT WOLTERS LICENSE No 62354 STATE OF FLORIDA PROFESSIONAL ENGINEER
AUG 9, 2024

SCOTT WOLTERS
FL PE# 62354

WOLTERS ENGINEERING
(COA# 27194)
15211 97TH ROAD N
WEST PALM BEACH, FL 33412
(561) 225-1982

PRODUCT: 1600 WALL SYSTEM 1 & 2

DWG: 1600-IR-HVHZ

SECTION: 7

SHEET: 39/42

EXTRUSION PROFILES

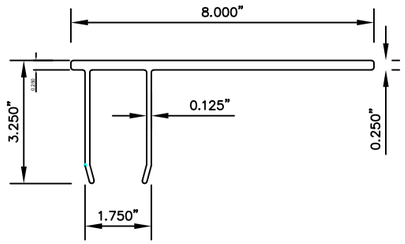

01

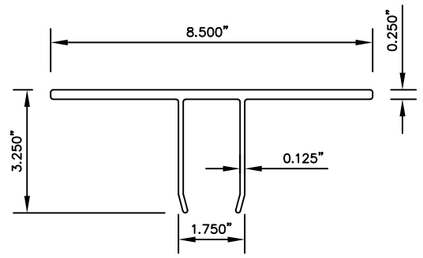

02

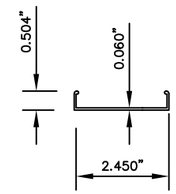

03

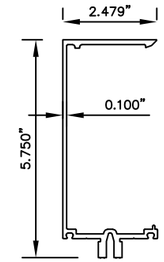

04

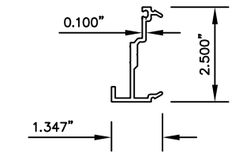

05

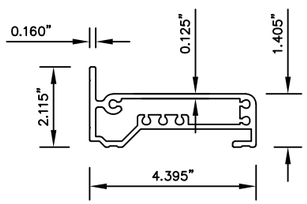

08

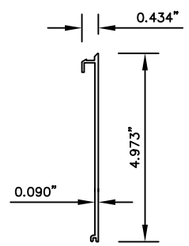

09

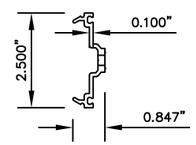

10

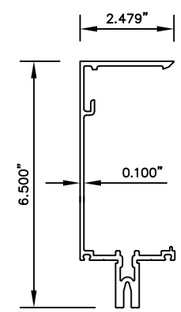

11

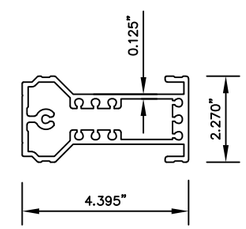

12

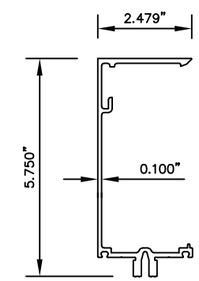

13

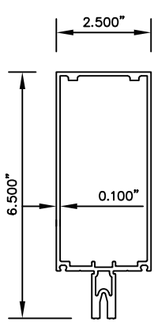

14

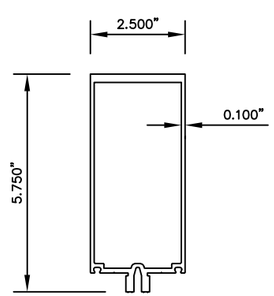

15

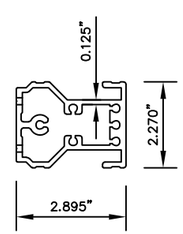

16

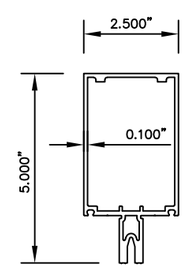

17

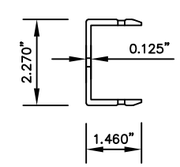

18

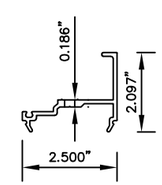

20

REV.#	DATE	REVISION
–	12/16/24	–
–	10/15/23	2023 CODE UPDATE
–	10/12/20	1ST SUBMITTAL
–		PRINTS ISSUED FOR

KAWNEER
AN ARCONIC COMPANY

555 GUTHRIDGE COURT
NORCROSS, GA 30092

PH: (770) 449-5555
WWW.KAWNEER.COM

SEAL:

SCOTT WOLTERS
FL PE# 62354

WOLTERS ENGINEERING
(COA# 27194)
15211 97TH ROAD N
WEST PALM BEACH, FL 33412
(561) 225-1982

SCOTT WOLTERS LICENSE No 62354 STATE OF FLORIDA PROFESSIONAL ENGINEER
AUG 27, 2026

PRODUCT:
1600 WALL SYSTEM 1 & 2

DWG:
1600-IR-HVHZ

SECTION:
7

SHEET:
40/42

EXTRUSION PROFILES

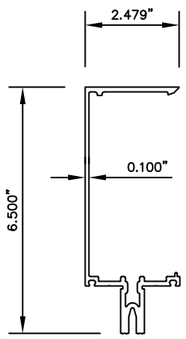

21

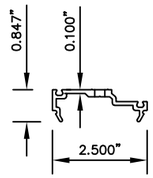

22

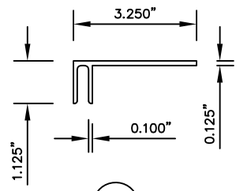

24

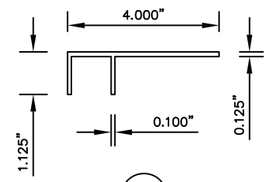

25

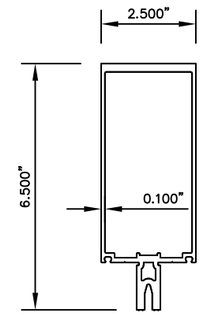

26

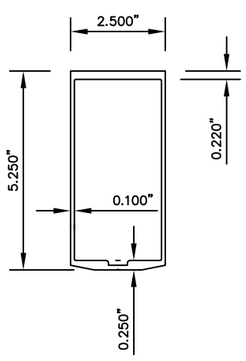

27

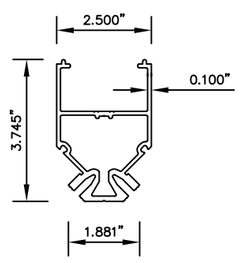

28

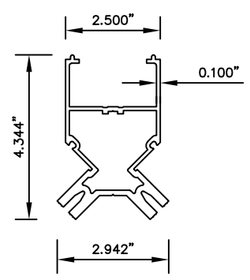

29

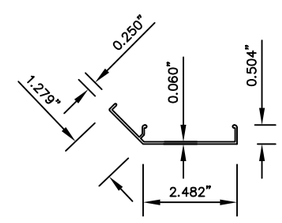

30

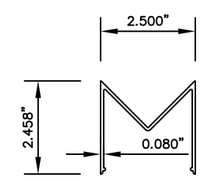

31

REV.#	DATE	REVISION
–	12/16/24	–
–	2/19/24	–
–	10/15/23	2023 CODE UPDATE
–	10/12/20	1ST SUBMITTAL
–	–	PRINTS ISSUED FOR
–	–	–
–	–	–
–	–	–

KAWNEER
AN ARCONIC COMPANY
555 GUTHRIDGE COURT
NORCROSS, GA 30092
PH: (770) 449-5555
WWW.KAWNEER.COM

SEAL:

SCOTT WOLTERS LICENSE No 62354 STATE OF FLORIDA PROFESSIONAL ENGINEER
AUG 17, 2026

SCOTT WOLTERS
FL PE# 62354

WOLTERS ENGINEERING
(COA# 27194)
15211 97TH ROAD N
WEST PALM BEACH, FL 33412
(561) 225-1982

PRODUCT:
1600 WALL SYSTEM 1 & 2

DWG:
1600-IR-HVHZ

SECTION: 7

EXTRUSION PROFILES

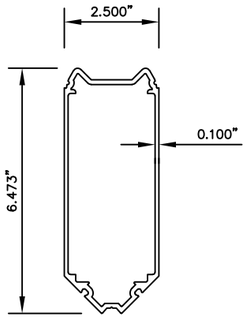

32

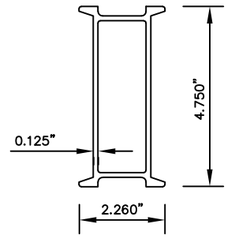

34

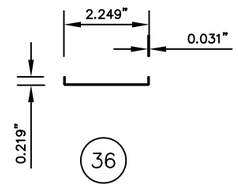

36

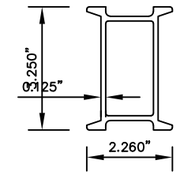

37

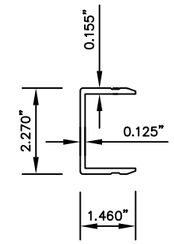

43

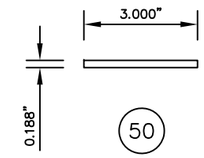

50

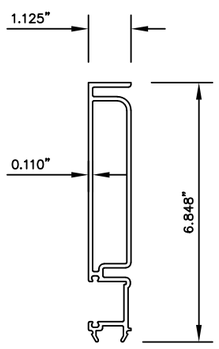

59

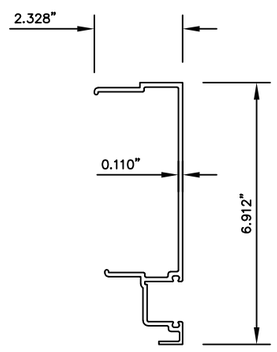

60

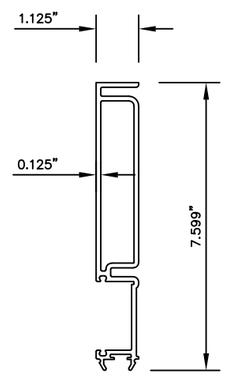

61

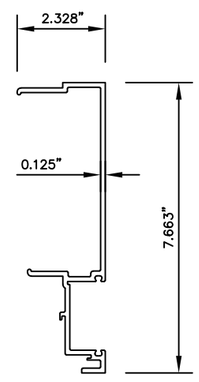

62

REV.#	DATE	REVISION
–	12/16/24	REVISION
–	2/19/24	REVISION
–	10/15/23	2023 CODE UPDATE
–	10/12/20	1ST SUBMITTAL
–	–	PRINTS ISSUED FOR

KAWNEER
AN ARCONIC COMPANY
555 GUTHRIDGE COURT
NORCROSS, GA 30092
PH: (770) 449-5555
WWW.KAWNEER.COM

SEAL:

SCOTT WOLTERS
LICENSE
No 62354
STATE OF FLORIDA
PROFESSIONAL ENGINEER
AUG 17, 2026

SCOTT WOLTERS
FL PE# 62354

WOLTERS ENGINEERING
(COA# 27194)
15211 97TH ROAD N
WEST PALM BEACH, FL 33412
(561) 225-1982

PRODUCT: 1600 WALL SYSTEM 1 & 2

DWG: 1600-IR-HVHZ

SECTION: 7

SHEET: 42/42